STEREO MINIDISC RECORDER

DM-3090

SERVICE MANUAL

KENWOOD

© 1997-11/B51-5396-00 (K/K) 1812

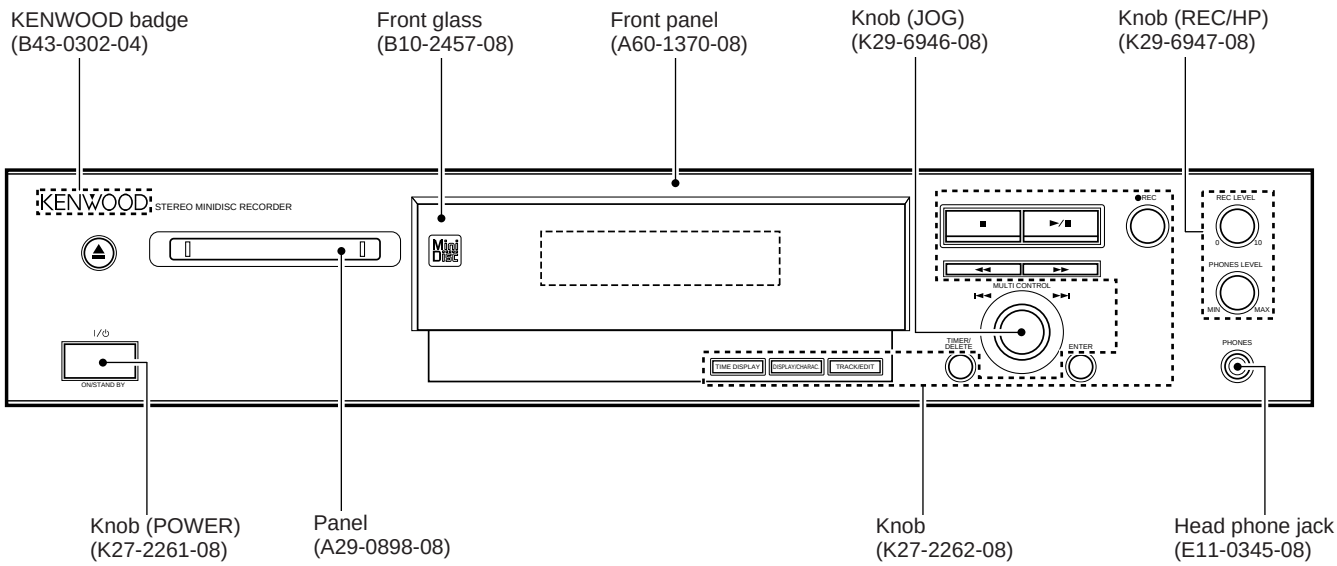

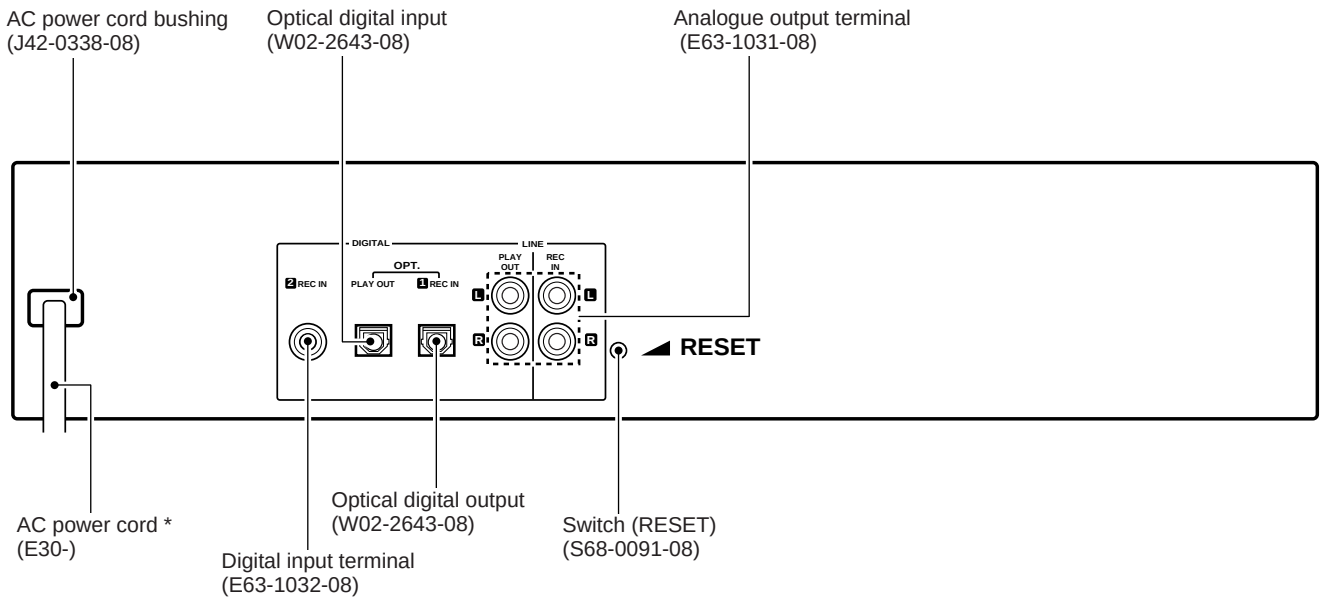

***Refer to parts list on page 49.**

In compliance with Federal Regulations, following are reproductions of labels on, or inside the product relating to laser product safety,

KENWOOD-Corp. certifies this equipment conforms to DHHS Regulation No.21 CFR 1040.10, Chapter 1, Subchapter J.

DANGER : Laser radiation when open and interlock defeated.
AVOID DIRECT EXPOSURE TO BEAM.

DM-3090

CONTENTS/ACCESSORIES/CAUTIONS

CONTENTS

CONTENTS/ACCESSORIES/CAUTIONS 2
CONTROLS 3
DISASSEMBLY FOR REPAIR 5
BLOCK DIAGRAM 7
CIRCUIT DESCRIPTION 9
TROUBLE SHOOTING 16
ADJUSTMENT 24
PC BOARD 32
SCHEMATIC DIAGRAM 37
EXPLODED VIEW 47
PARTS LIST.....49
SPECIFICATIONS .....Back cover

Accessories

Audio cord (2)
(E30-0505-05)

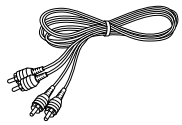

Optical fiber cable (1)
(B19-1529-05)

Remote control unit (1)
(A70-1208-08)

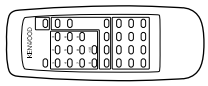

Batteries (2)

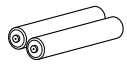

Battery cover (A09-0337-08)

Cautions

Beware of condensation

When water vapor comes into contact with the surface of cold material, water drops are produced. If condensation occurs, correct operation may not be possible, or the unit may not function correctly.
This is not a malfunction, however, and the unit should be dried.
(To do this, turn the POWER switch ON and leave the unit as it is for several hours.)

Be especially careful in the following conditions:

- When the unit is brought from a cold place to a warm place and there is a large temperature difference.
- When a heater starts operating.
- When the unit is brought from an air-conditioned place to a place of high temperature with high humidity.
- When there is a large difference between the internal temperature of the unit and the ambient temperature, or in conditions where condensation occurs easily.

If a problem occurs

If this product is subjected to strong external interference (mechanical shock, excessive static electricity, abnormal supply voltage due to lightning, etc.) or if it is operated incorrectly, it may malfunction or the display may not function correctly. If such a problem occurs, do the following:

- Unplug the AC power lead from the AC socket.
- Wait about 20 - 30 seconds and then plug the AC power lead back into the AC socket.
- Press the reset key on the back of the unit.

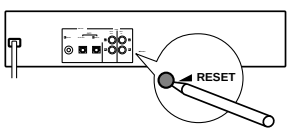

- When the reset key is pressed, all of the settings in memory will be erased.

CONTROLS

Names and functions of parts

Front panel

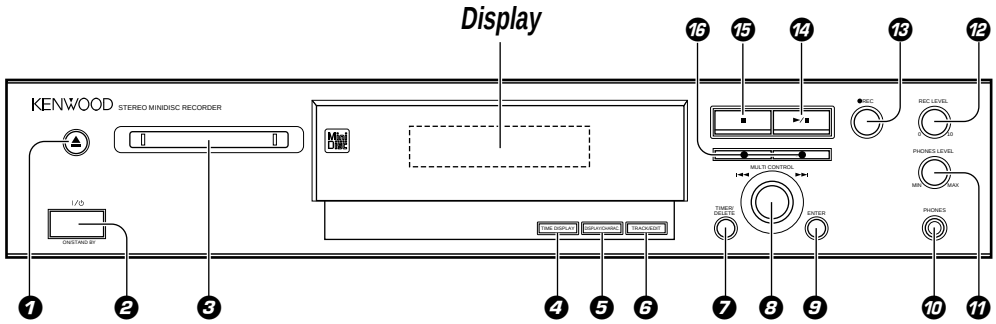

❶ Eject key: ▲
❷ Power switch (ON/STAND BY key)
❸ Mini Disc Insertion slot
❹ TIME DISPLAY key
❺ DISPLAY/CHARAC key
❻ TRACK/EDIT key
❼ TIMER/DELETE key
❽ Jog dial (Next/Previous)
❾ ENTER key
❿ Headphone jack (HONES)
⓫ Headphone output level control
⓬ Record level control
⓭ Record key: ●
⓮ Play/Pause key: ►/II
⓯ Stop key: ■
⓰ Cue/Review key: ◄◄/►►

Display

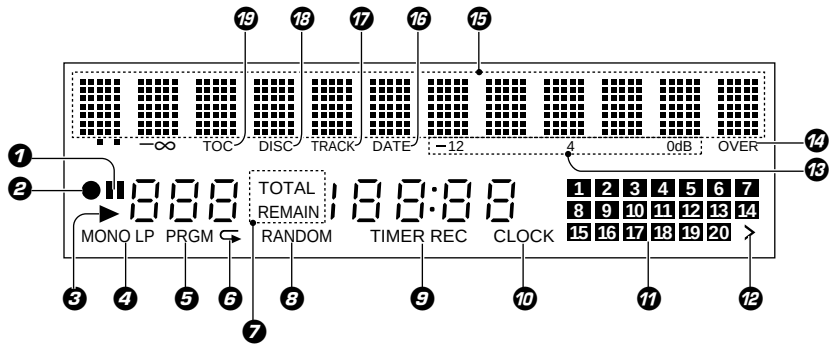

❶ Pause indicator: II
❷ Record indicator: ●
❸ Play indicator: ►
❹ Monaural Long-Play Mode indicator
❺ Programme indicator
❻ Repeat indicator:
❼ Total Time/Remaining Time indicator
❽ Random indicator
❾ Timer Playback/Timer Recording indicator
❿ Clock indicator
⓫ Music Calendar
⓬ More Tracks indicator
⓭ Recording Level indicator
⓮ Recording level too high indicator
⓯ Level Meter/Character Information display
⓰ Date indicator
⓱ Track indicator
⓲ Disc Name indicator
⓴ TOC Indicator: TOC

CONTROLS

Remote control unit

The remote control unit incorporates the basic operation keys as well as a variety of applied operation keys so that it can be used in a wide range of purposes.
Use care to store the remote control unit in a safe place so as not to lose it.

❶ POWER key

❷ EJECT key

❸ Numeric keys

❹ Basic operation keys

⏮◀◀ / ▶▶⏭ : Skip down/ Skip up (Cue/Review) key

REC : Record key

■ : Stop key

▶/❚❚ : Play/Pause key

PLAY MODE : Play mode key

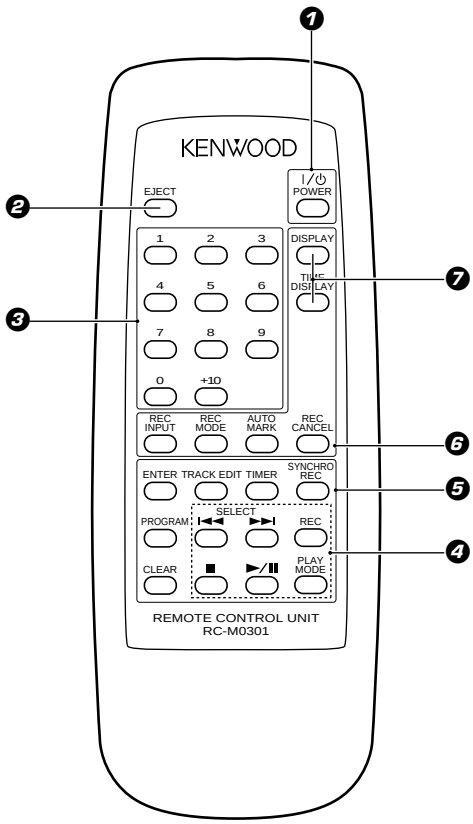

Model: RC-M0301
Infrared ray system

❺ Applied operation keys

ENTET: Entet key

TRACK EDIT: Edit key

TIMER: Timer key

SYNCHRO REC: Synchro recording key

PROGRAM: Program key

❻ Recording operation keys

REC INPUT: Input select key

REC MODE: Record mode key

AUTO MARK: Auto mark key

REC CANCEL: Record cancel key

❼ Display keys

DISPLAY : Display key

TIME DISPLAY : Time display key

Listening through headphones

Plug the stereo headphones (with standard-plug) available in audio stores into the PHONES jack and adjust the listening volume with the **PHONES LEVEL** control on the front panel.

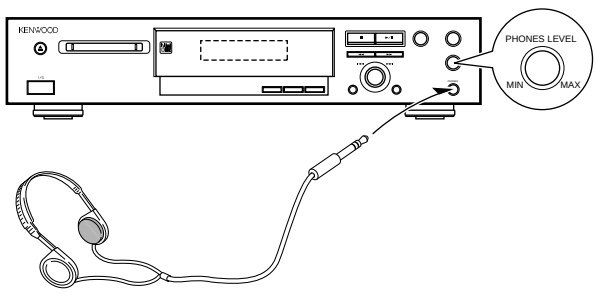

DISASSEMBLY FOR REPAIR

REMOVING AND REINSTALLING THE MAIN PARTS

MD MECHANISM SECTION

Perform steps 1 to 3 of the disassembly method to remove the MD mechanism.

How to remove the magnetic head (See Fig. 10-1)

1. Remove the screws (A1) x 1 pc.

10

Caution:

Take utmost care so that the magnetic head is not damaged when it is mounted.

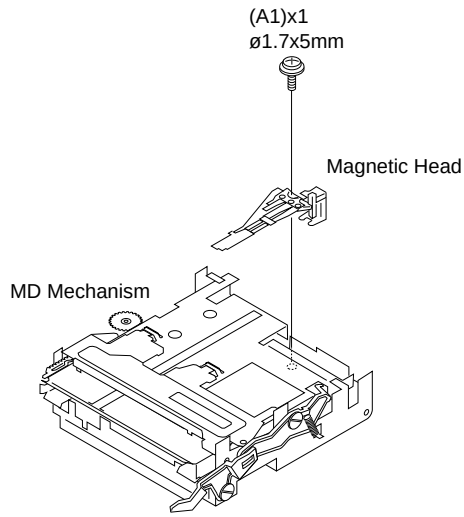

Figure 10-1

How to remove the cartridge holder (See Fig. 10-2)

1. Open the roller arm lever in the arrow direction, and lower the clamper lever to the rear side.
2. Apply +5V to the red line side of blue connector of loading motor, push the rack gear in the arrow direction to move the cam plate lever until tick is heard.
3. Remove the screw (B1) x1 pc., and the spring (B2) x1 pc., fitted to the holder arm, and shift the cartridge holder to the left side to remove it.

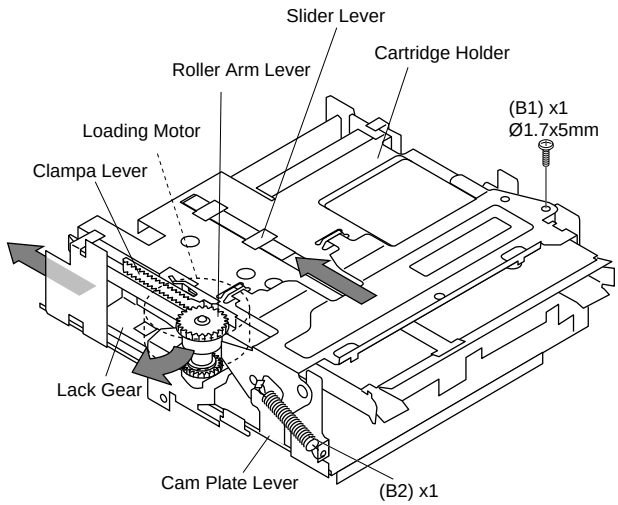

Figure 10-2

How to remove the mechanism switch PWB (See Fig. 10-3)

1. Remove the screws (C1) x 2 pcs., and remove the mechanism switch PWB.

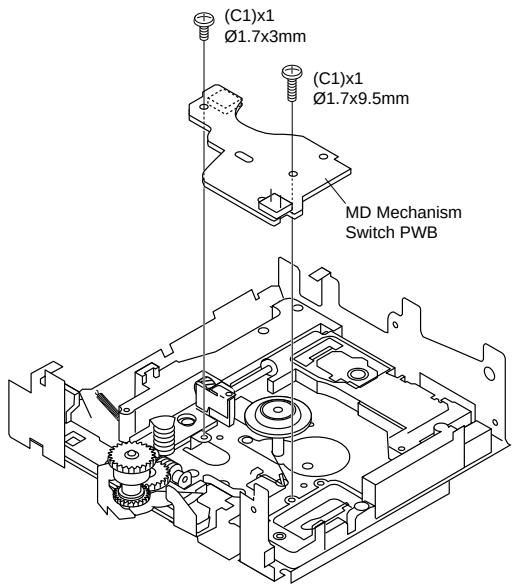

Figure 10-3

DISASSEMBLY FOR REPAIR

How to remove the sled motor/loading motor (See Fig. 11-1)

1. Remove the screws (D1) x 1 pcs., and remove the sled motor/loading motor.

Caution:
Be careful so that the gear is not damaged.
(The damaged gear emits noise during searching.)

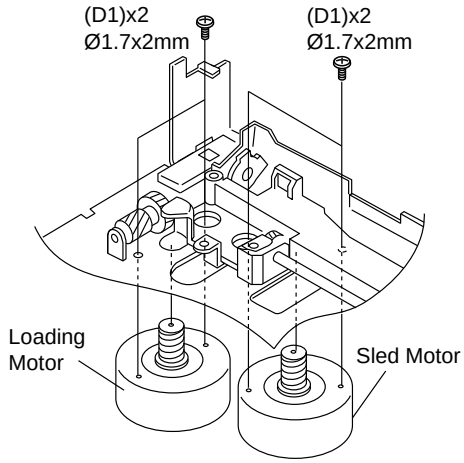

Figure 11-1

How to remove the spindle motor (See Fig. 11-2)

1. Remove the screws (E1) x 3 pcs., and remove the spidle motor.

Caution:
Be careful so that the turntable is not damaged.

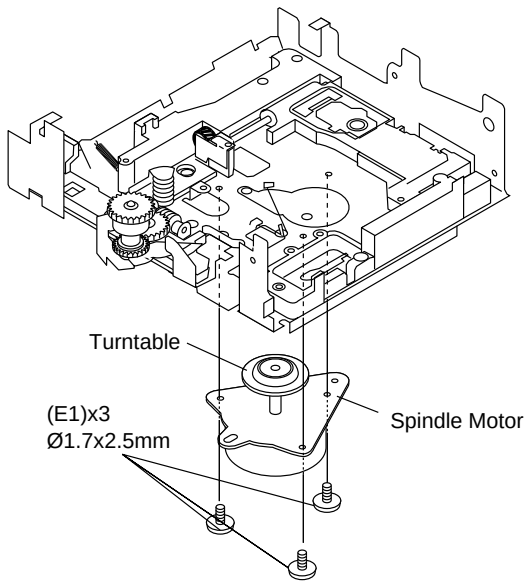

Figure 11-2

How to remove the optical pickup (See Fig. 11-3)

1. Remove the screws (F1) x 3 pcs.

Caution:
Be careful so that the gear is not damaged.
(The damaged gear emits noise during searching.)

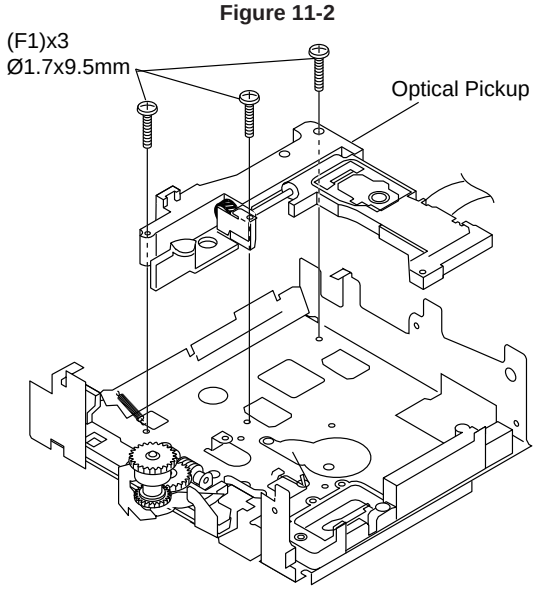

Figure 11-3

BLOCK DIAGRAM

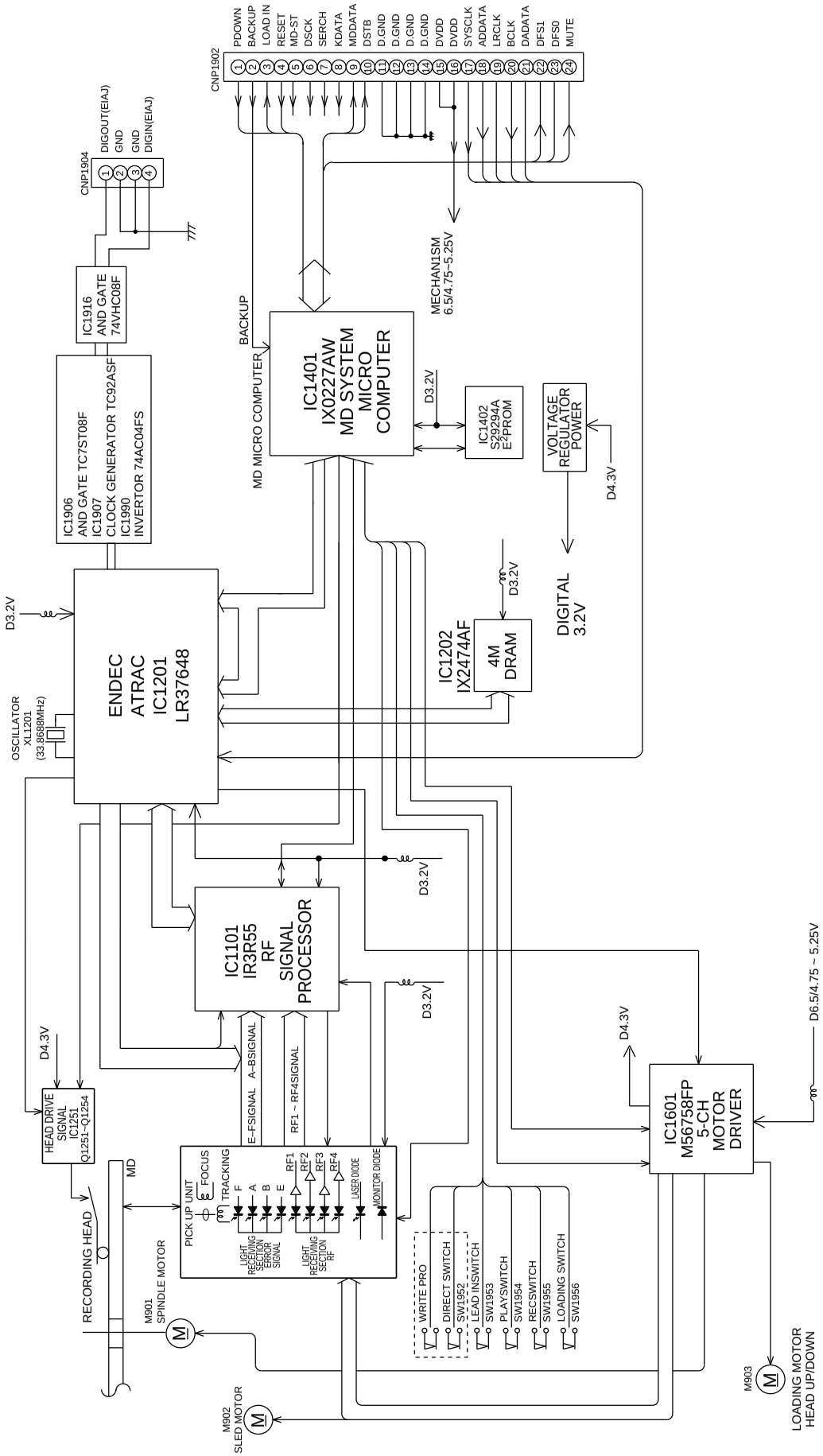

Figure 28BLOCK DIAGRAM (1/2)

BLOCK DIAGRAM

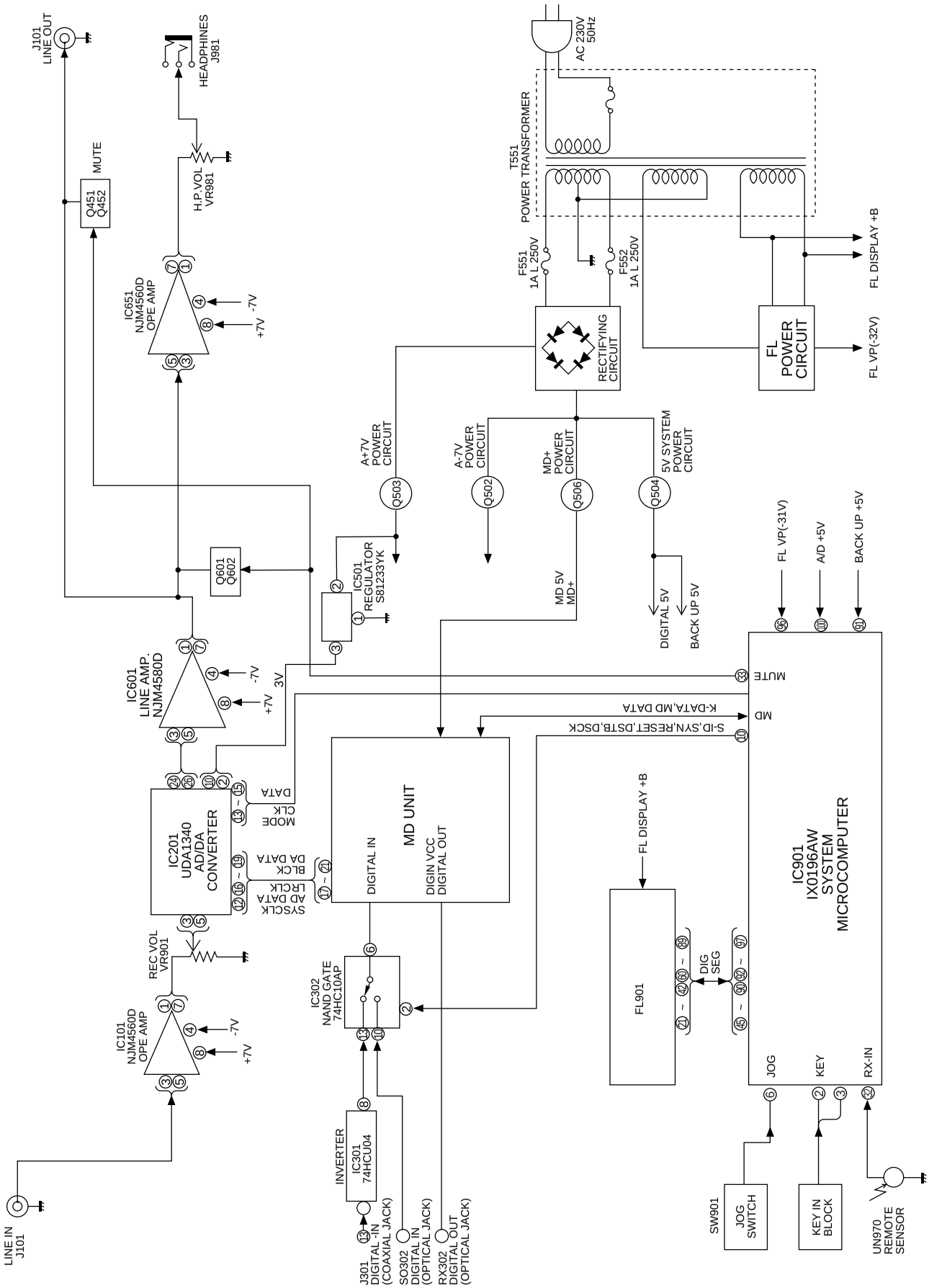

Figure 29BLOCK DIAGRAM (2/2)

CIRCUIT DESCRIPTION

IC1101 VHiiR3R55//-1:RF Signal Control (IR3R55)

Pin No.	Terminal Name	I/O	Function
1	RF1	I	RF signal input terminal 1 Input of RF signal output of pickup
2	RF2	I	RF signal input terminal 2 Input of RF signal output of pickup
3	RF3	I	RF signal input terminal 3 Input of RF signal output of pickup
4	RF4	I	RF signal input terminal 4 Input of RF signal output of pickup
5	REFI	I	Reference voltage amp. input terminal
6	REFO	O	Reference voltage amp. output terminal
7	RFADD	O	RF1 to 4 resistance addition output terminal
8	TCGI	I	Track cross detection signal amp. input terminal for groove
9	AIN	I	Servo signal amp. (focus servo system) inversion input terminal
10	BIN	I	Servo signal amp. (focus servo system) inversion input terminal
11	EIN	I	Servo signal amp. (tracking servo system) inversion input terminal
12	FIN	I	Servo signal amp. (tracking servo system) inversion input terminal
13	BIAS	I	Bias input terminal
14	AVCC	–	Analog section power terminal
15*	VSTBY	O	Logic signal output terminal (STBY signal inversion signal is output.)
16*	XDISC	O	Logic signal output terminal (DISC signal inversion signal is output.)
17*	XSGAIN	O	Logic signal output terminal (SGAIN signal inversion signal is output.)
18	AGND	–	Analog section GND terminal
19	DGND	–	Digital section GND terminal
20	DTEMP	–	Chip temperature detection terminal
21	LATCH	I	Latch signal input terminal
22	CLOCK	I	Clock signal input terminal
23	DATA	I	Serial data input terminal
24	DVCC	–	Digital section power terminal
25	FOUT	O	Servo signal amp. (tracking servo system) output terminal
26	EOUT	O	Servo signal amp. (tracking servo system) output terminal
27	BOUT	O	Servo signal amp. (focus servo system) output terminal
28	AOUT	O	Servo signal amp. (focus servo system) output terminal
29	TCGO	O	Track cross detection signal amp. output terminal for groove
30	WBO	O	Comparator output terminal for ADIP signal binary-coding
31	22KI	I	Comparator input terminal for ADIP signal binary-coding
32	22KO	O	ADIP signal HPF amp. output terminal
33	ADLPFO	O	ADIP signal LPF amp. output terminal
34*	NC	–	NC
35	ADIPO	O	ADIP signal primp. output terminal
36	ADIPI	O	ADIP signal AGC amp. output terminal
37	ADAGC	–	ADIP signal AGC smoothing capacitor connection terminal
38	ADAGI	I	ADIP signal AGC amp. input terminal
39	RF2-1	–	RF1 and RF2 difference signal
40	EFMO	O	RF signal primp. output terminal
41*	WFMI	O	RF signal AGC amp. output terminal
42	AVCC	–	Analog section power terminal
43	AGND	–	Analog section GND terminal
44	EFMAGC	–	EFM signal AGC smoothing capacitor connection terminal
45	EFMAGI	I	EFM signal AGC amp. output terminal
46*	ATTR	–	Pins 47 and 48 output signal attenuation terminal
47	GOUT	O	Output of signal of RF1+RF2-RF3-RF4 for groove
48	POUT	O	Rf1 to 4 resistance addition output for pit

In this unit, the terminal with asterisk mark (*) is (open) terminal which is not connected to the outside.

CIRCUIT DESCRIPTION

IC1201 VHiLR37648/-1:ENDEC/ATRAC (LR37648)

Pin No.	Terminal Name	Input/Output	Function
1*	EFMMON	Output	EFM monitor output
2	AVCC	—	Analog power
3	EFMI	Input	EFM signal input from RF amp.
4	AGND	—	Analog GND
5	AIN	Input	Focus error signal A
6	EIN	Input	Tracking error signal E
7	TCG	Input	Track cross signal
8	BIN	Input	Focus error signal B
9	FIN	Input	Tracking error signal F
10*	VBAT	Input	Power voltage detection signal for constant voltage servo
11	WBI	Input	ADIP wobble signal
12	VDD1	—	Digital power
13	DGND	—	Digital GND
14,15	TEST0,TEST1	Input	Input for test. Connection to GND in case of normal use
16	TEST2	Input	Input for test. Endecode/servo mode and ATRAC mode selection
17	X176KO	Output	Clock output. f=176.4 kHz (4fs)
18	FODRF	Output	Focus servo forward output. PWM
19	FODRR	Output	Focus servo reverse output. PWM
20	TRDRF	Output	Tracking servo forward output. PWM
21	LATCH	Output	Tracking servo reverse output. PWM
22	CLOCK	Output	Slide servo forward output. PWM
23	DATA	Output	Slide servo reverse output. PWM
24	DVCC	Output	Spindle servo forward output or spindle servo output. PWM
25	FOUT	Output	Spindle servo reverse output or spindle rotation (forward/reverse)selection
26	EOUT	Output	Address output to external D-RAM. ADR3
27	BOUT	Output	Address output to external D-RAM. ADR2
28	AOUT	Output	Address output to external D-RAM. ADR1
29	TCGO	Output	Address output to external D-RAM. ADR0 (LSB)
30*	WBO	Output	Address output to external D-RAM. ADR10 (MSB)
31	22KI	—	Power supply for DRAM interface
32	22KO	Output	Address output to external D-RAM. ADR4
33	ADLPFO	Output	Address output to external D-RAM. ADR5
34	NC	Output	Address output to external D-RAM. ADR6
35	ADIPO	Output	Address output to external D-RAM. ADR7
36	ADIPI	Output	Address output to external D-RAM. ADR8
37	ADAGC	Output	Data output enable signal output to external D-RAM
38	ADAGI	—	Digital GND
39	RF2-1	Output	Column address strobe signal output to external D-RAM
40	EFMO	In/Output	Data input/output from and to external D-RAM. D2
41	WFMI	In/Output	Data input/output from and to external D-RAM. D3 (MSB)
42	AVCC	Output	Data input/output from and to external D-RAM. ADR9
43	AGND	Output	Low address strobe signal output to external D-RAM
44	EFMAGC	Output	Data write enable signal output to external D-RAM
45	EFMAGI	In/Output	Data input/output from and to external D-RAM. D1
46	ATTR	In/Output	Data input/output from and to external D-RAM. D0 (LSB)
47*	GOUT	Output	Track cross signal
48*	POUT	Output	ADIP CRC error flag monitor output
49*	PLCK	Output	EFM PLL clock output in playback mode
50	EFM0	Output	EFM signal output in record mode. C1F (C1 error flag) monitor output in playback mode
51*	X700KO	Output	Clock output. f = 705.6 kHz. Clock output is not performed when RSTX = 0.
52*	EXPORT0	Output	Microcomputer extension output port 0
53*	EXPORT1	Output	Microcomputer extension output port 1

In this unit, the terminal with asterisk mark (*) is (open) terminal which is not connected to the outside.

CIRCUIT DESCRIPTION

Pin No.	Terminal Name	Input/Output	Function
54	TESO1	Output	PLLLR. Microcomputer extension output port 2 in case of selection
55	TESO3	In/Output	PLLOSC. Microcomputer extension output port 3 in case of selection
56	TEST4	In/Output	EXTCLK. Microcomputer extension output port 4 in case of selection
57	CDDATA	In/Output	High speed dubbing CD data input. Microcomputer extension output port 5 in case of selection
58	CDLRCK	In/Output	High speed dubbing CD LR data input. Microcomputer extension output port 6 in case of selection
59	CDBCLK	In/Output	High speed dubbing CD bit data input. Microcomputer extension output port 7 in case of selection
60	VXI	Input	Vari-pitch PLL clock input
61	VPO	Output	Vari-pitch PLL phase error output
62	VDD1	—	Digital power
63	DGND	—	Digital GND
64	XI	Input	Oscillation circuit input. 33.8688 MHz
65	XO	Output	Oscillation circuit input. 33.8688 MHz
66	DIN	Input	Digital input signal
67	DOUT	Output	Digital output signal
68	VDD3	—	Power for internal PLL
69	DGND	—	Digital GND
70	LRCK	Output	Music data Lch/Rch selection output
71	BLCK	Output	Music data shift clock
72	DFCK	Output	AD/DA converter digital filter clock. 256 Fs
73	ADDATA	Input	Audio data input
74	DADATA	Output	Audio data output
75*	FEMON	Output	Focus error signal monitor output
76*	TOTMON	Output	Total signal monitor output
77*	TEMON	Output	Tracking error signal monitor output
78*	SBCK	Input	DIN subcode read clock. EIAJ CP-309 Format
79*	SBO	Output	DIN subcode serial data. EIAJ CP-309 Format
80*	SBSY	Output	DIN subcode block sync signal. EIAJ CP-309 Format
81	SFSY	Output	DIN subcode frame sync signal. EIAJ CP-309 Format
82	FOK	Output	Focus OK detection signal. "0" : Focus OK
83	SENSE	Output	Servo status detection signal. "1": Auto-move, auto-jump, auto-focus retraction
84	COUT	Output	Track cross signal output
85	MCCK	Output	Microcomputer clock output. Clock output is performed also when RSTX = 0.
86	DINTX	Output	System controller interface interruption request output terminal
87	VDD1	—	Digital power
88	DGND	—	Digital GND
89	RSTX	Input	Chip reset input. "L": Reset
90	SYD0	In/Output	System controller interface data bus terminal (LSB)
91~96	SYD1~SYD6	In/Output	System controller interface data bus terminal
97	SYD7	In/Output	System controller interface data bus terminal (MSB)
98	SYWRX	Input	System controller interface register writing pulse input
99	SYRDX	Input	System controller register read pulse input
100	SYRS	Input	System controller interface register selection input

In this unit, the terminal with asterisk mark (*) is (open) terminal which is not connected to the outside.

CIRCUIT DESCRIPTION

IC1401 RX-iX0227AWZZ:MD System Microcomputer (IX0227AW)

Pin No.	Terminal Name	Input/Output	Function
1*	P96/ANEX1	Output	Not used
2*	P95/ANEX0	Output	Not used
3	P94/DA1	Output	LDVAR (laser power adjustment output)
4*	P93/DA0	Output	ADJS (for automatic adjustment step check)
5*	P92/TB2IN	Output	Not used
6	P91/TB1IN	Input	LD SW CK input (interruption input only in single state)
7	P90/TB0IN	Input	ERR input (monitor PLL UNLOCK)
8	BYTE	Input	GND
9	CNVss	Input	GND
10*	P87/XCIN	Output	ST-ID Output
11*	P86/XOUT	Output	MD search output
12	RESET	Input	RESETInput
13*	XOUT	—	Extal clock output
14	Vss	—	GND
15	XIN	Input	EXTAL (8.4672 MHz)
16	Vcc	—	+ 3.15V
17	P85/NMI	Input	Connect +B
18	P84/INT2	Input	DINT (interruption input from MD LSI)
19	P83/INT1	Input	DSENSE (servo sense input from MD LSI)
20	P82/INT0	Input	ST-ID Input (MD-ON)
21	P81/TA4IN	Input	CD search input (syncro REC suspension input from MD LSI)
22	P80/TA4OUT	Output	MD RSW Output
23*	P77/TA3IN	Input	FSW1 (SW power frequency selection)
24	P76/TA3OUT	Output	Vari-pitch correspondence given (H)/not given (L)
25	P75/TA2IN	Input	P-DOWN (power failure detection)
26	P74/TA2OUT	Output	HDON (magnetic head current ON/OFF output)
27	P73/TA1IN	Output	LD+ (loading motor + control output)
28	P72/TA1OUT	Output	LD- (loading motor + control output)
29	P71/TA0IN	Input	CIN (track count signal input)
30	P70/TA0OUT	Input	INN SW (inner SW detection input)
31	P67/TXD1	Output	R-DATA
32	P66/RXD1	Output	R-LATCH
33	P65/CLK1	Output	R-CLK
34	P64/CTS1/RTS1/ CTS0/CLKS1	Output	DSTB (system controller communication enable and communication beingexecuted)
35	P63/TXD0	Output	MD DATA (MD Data Output)
36	P62/RXD0	Input	K DATA (system controller data input)
37	P61/CLK0	Input	DSCK (system controller communication clock input)
38	P60/CTS0/RTS0	Input	4M/16M DRAM selection input
39	P57/RDY/CLKOUT	Output	R/P output (REC/PLAY selection)
40	P56/ALE	Input	FOK (focus servo status monitor input)
41*	WFMI	Input/Output	Not used
42	AVCC	Output	S2 Ouput
43	AGND	Output	S1 Output
44	EFMAGC	Output	SYRS (MD-LSI register selection signal output)
45	EFMAGI	Output	SYRD (MD-LSI read signal output)
46	ATTR	Output	SYWR (MD-LSI right signal output)
47	GOUT	In/Output	SYS D7 (data bus 7)
48	POUT	In/Output	SYS D6 (data bus 6)
49	PLCK	In/Output	SYS D5 (data bus 5)
50	EFM0	In/Output	SYS D4 (data bus 4)
51	X700KO	In/Output	SYS D3 (data bus 3)

In this unit, the terminal with asterisk mark (*) is (open) terminal which is not connected to the outside.

CIRCUIT DESCRIPTION

Pin No.	Terminal Name	Input/Output	Function
52	P42/A18	In/Output	SYS D2 (data bus 2)
53	P41/A17	In/Output	SYS D1 (data bus 1)
54	P40/A16	In/Output	SYS D0 (data bus 0)
55*	P37/A15	Output	Not used
56*	P36/A14	Output	Not used
57*	P35/A13	Output	Not used
58	P34/A12	Output	EEPRO (EEPROM protection cancel)
59	P33/A11	Output	EPCS (EEPROM chip selector output)
60	P32/A10	In/Output	EEPD (EEPROM sirial data output)
61	P31A9	Output	EEPK (EEPROM sirial colck output)
62	Vcc	Input	+ 3.15V
63*	P30/A8	Output	Not used
64	Vss	—	GND
65*	P27/A7	Output	L3 DATA (soft serial communication, 2 modes provided, LSB fast)
66*	P26/A6	Output	L3 MODE (soft serial communication, 2 modes provided, LSB fast)
67*	P25/A5	Output	L3 CLK (soft serial communication, 2 modes provided, LSB fast)
68*	P24/A4	Output	Not used
69*	P23/A3	Output	Not used
70	P22/A2	Output	PCNT0 output
71*	P21/A1	Output	Not used
72	P20/A0	Output	LDON output (H: ON)
73	P17/D15	Output	ANLPTR output
74*	P16/D14	Output	ADPON output (for CK)
75*	P15/D13	Output	DAPON output (for CK)
76	P14/D12	Output	DFS0 output
77	P13/D11	Output	DFS1 output
78*	P12/D10	Output	DIG EX output (for CK)
79*	P11/D9	Output	DIG CD output (for CK)
80	P10/D8	Output	XRST (system reset output)
81*	P07/D7	Output	AD MUTE output (for CK)
82*	P06/D6	Output	EMPHA output (for CK)
83*	P05/D5	Output	DA MUTE output (for CK)
84	P04/D4	Output	MUTE output
85*	P03/D3	Output	DOUTM output (for CK)
86	P02/D2	Input	TEST2 (special mode selection 2)
87	P01/D1	Input	TEST1 (special mode selection 1)
88	P00/D0	Input	TEST0 (special mode selection 0)
89	P107/AN7/KI3	Input	AVCK3 (special mode monitor input)
90	P106/AN6/KI2	Input	AVCK2 (AD/DA section 3.1V monitor input)
91	P105/AN5/KI1	Input	AVCK1 (DOUT section 5V monitor input)
92	P104/AN4/KI0	Input	DTEMP (temperature detection input)
93	P103/AN3	Input	MINF (disc type/REC input)
94	P102/AN2	Input	TEST K1 (test key input 1)
95	P101/AN1	Input	TEST K2 (test key input 2)
96	AVss	—	GND
97	P100/AN0	Input	HINF (mechanism position/HEAD position)
98	VREF	—	+ 3.15V
99	AVcc	—	+ 3.15V
100	P97/ADTRG	Input	Connect +B

In this unit, the terminal with asterisk mark (*) is (open) terminal which is not connected to the outside.

CIRCUIT DESCRIPTION

IC901 RH-iX0196AFZZ: System Control Microcomputer (iX0196AW)

Pin No.	Port Name	Terminal Name	Input/Output	Function
1*	P77/AN7	KEY1	Output	Not used
2	P76/AN6	KEY2	Input	Key entry
3	P75/AN5	KEY3	Input	Key entry
4*	P74/AN4	—	Output	Not used
5	P73/AN3	INI	Input	Initial setting entry
6	P72/AN2	JOG_AD	Input	Jog dial entry
7*,8*	P71/AN1,P70/AN0	—	Output	Not used
9*	PB3	—	Output	Not used
10	PB2/DA	DIG SEL1	Output	Digital signal selector selection signal
11*	P57/SRDY3/AN15	DIG SEL2	Output	Not used
12*	P56/SCLK3/AN14	—	Output	Not used
13*	P55/SOUT3/AN13	—	Output	Not used
14	P54/SIN3/AN12	DAC_MODE	Output	Externally provided DAC/ADC serial interface mode signal
15	P52/SRDY2/AN11	DAC_CLK/EX	Output	Externally provided DAC/ADC serial interface clock signal
16	P52/SCLK2/AN10	DAC_DATA/EX	Output	Externally provided DAC/ADC serial interface clock signal
17*	P51/SOUT2/AN9	—	Output	Not used
18	P50/SIN2/AN8	DFS0/DFS1	Input	EMPHASIS information from MD
19	P67/SRDY1/CS/ SCLK12	DSTRB	Input	MD serial interface strobe signal
20	P66/SCLK1	DSCK	Output	MD serial interface clock signal
21	P65/SOUT1	K-DATA	Output	MD serial interface transmission signal
22	P64/SIN1	MD-DATA	Input	MD serial interface reception signal
23	P63/CNTR1	MD-LO/EJ	Output	MD loading power voltage selection signal
24*	P62/CNTR0	—	Output	Not used
25*	P61/PWM	—	Output	Not used
26*	P60	—	Output	Not used
27*	P47/T3OUT	—	Output	Not used
28*	P46/T1OUT	—	Output	Not used
29	P45/INT1/2CR	P IN	Input	Power failure detection
30*	P44/INT4	P.CNT	Output	Power control
31	P41	P-OUT	Output	MD power failure detection signal
32	P42/INT2	RX-IN	Input	Remote control loght reception signal
33	P41	P-MUTE	Output	Audio mute control signal
34	P40/INT0	—	Input	GND
35	RESET	RESET	Input	RESET signal entry
36	PB1/Xcin	Xcin	Input	Sub clock IN connection (32.7k)
37	PB0/Xcout	Xcout	Output	Sub clock OUT connection (32.7k)
38	Xin	Xin	Input	Main clock IN connection (8M)
39	Xout	Xout	Output	Main clock OUT connection (8M)
40	VSS	VSS	Input	GND
41	P27	SERCH	Output	CD to MD search monitor signal
42	P26	LOAD	Input	MD loading detection
43	P25	S-ID	Output	CD to MD start ID signal
44	P24	MD RESET	Output	RESET signal to MD

In this unit, the terminal with asterisk mark (*) is (open) terminal which is not connected to the outside.

CIRCUIT DESCRIPTION

Pin No.	Port Name	Terminal Name	Input/Output	Function
45-54	P23/DIG19- P12/DIG10	UDIG0-UDIG9	Output	Digit for FL drive
55,56	P11/SEG41/DIG9, P10/SEG40/DIG8	UDIG10,UDIG11	Output	Digit for FL drive
57-60	P07/SEG39/DIG7- P04/SEG36/DIG4	UDIG12-UDIG15	Output	Digit for FL drive
61-64	P05/SEG35/DIG3- P00/SEG33/DIG0	S35-S32	Output	Segment for FL drive
65-72	P37/SEG31- P30/SEG25	S31-S25	Output	Segment for FL drive
72-80	P97/SEG23- P90/SEG16	S0-S8	Output	Segment for FL drive
81-88	P87/SEG15- P80/SEG8	S9-S16	Output	Segment for FL drive
89,90	PA7/SEG7, PA6/SEG6	S17,S18	Output	Segment for FL drive
91	VCC	VCC	Input	+5V
92-97	PA5/SEG5- PA0/SEG0	S19-S24	Output	Segment for FL drive
98	VEE	VEE	Input	-30V
99	AVSS	AVSS	Input	GND
100	VREF	VREF	Input	+5V

TROUBLE SHOOTING

When an error message is displayed, proceed as follows:

Error messages	Meaning	Remedy
BLANK MD	• Nothing is recorded.	• Replace the MD wiht a recoded disc.
Can't COPY	• No copy can be made because of the SCMS copyright system.	• Record using the analogue cable.
Can't EDIT	• A track cannot be edited.	• Change the stop position of the track and then try editing it.
Can't REC	• Recording cannot be pertormed correctly due to vibration.	• Stop vibration and try again.
DEFECT	• Since this MD has scratches on it, the recording operation was skipped.	• Replace the disc with another recordable disc.
Din UNLOCK	• Poor connection of the digital cable.	• Connect the digital cable securely.
DISC ERR	• The disc damaged. • The TOC information is not recorded on the disk or the date contains.	• Reload the disc or replace it.
DISC FULL	• The MD is out of recording space.	• Replace the disc with another recordable disc.
FOCUS ERROR	• A MD has not been loaded. • The disc data cannot be read.	• Reload the MD.
MECHA ERR**	• There is a mechanical problem and the disc is working properly.	• Reset the microprocessor referring to "If a problem occurs".
NAME FULL	• The number of characters for the MD name or track name exceeds 40.	• Shorten the MD or track name.
NO DISC	• MD has not been loaded. • MD data cannot be read.	• Load a MD. • Reload the MD.
NOT AUDIO	• The data recorded on this disc is not audio data.	• Select another track. • Replace the MD.
PLAYBACK MD	• You tried to record on a playback-only disc.	• Raplace it with a recordable MiniDisc.
PROTECTED	• The MD is write protected.	• Move the write protection tab back to its original position.
TEMP OVER	• The temperature is too high.	• Turn off the power, and wait for a whilst.
TOC ERR**	• The MD is excessively damages	• Replace the disc with another disc.
TOC FULL**	• There is no space left for recording character infomation (track names, disc names, etc.)	• Replace the MD with another recordable disc.
TOC W ERROR	• Trouble has occurred.	• Contact a KENWOOD Authorized Sevicing Dealer or KENWOOD Authorized Sevice station.
U TOC ERR**	• The TOC infomation on this disc does not meet the MD specifications or it cannot be read.	• Replace it with another MD. • Erase all the data, and try recording.
U TOC W ERR	• The TOC infomation could not be created properly due to a mechanical shock or to scratches on the disc.	• Turn off the power, and try to write the TOC-information again. (Remove any source of shock or vibration whilst writing.)
? DISC	• The MD contains an error.	• Replace the disc with another disc.
0-00:00	• Music is not being recorded.	• Replace the disc with a recorded disc.

**Number or symbol

TROUBLE SHOOTING

EXPLANATION OF ERROR DISPLAY

Error display	Errors	Corrective action
Can't REC	• Defect occurred successively 10 times during REC-PLAY. • As a result of occurrence of defect during REC-PLAY the recordable cluster became zero. • Adress is unreadable. REC state connot be set for 20 seconds although retry is repeated.	• Check that the disc is free from flaw, dust and fingerprint. Check whether there is any black spot. Check for disc disalignment and run-out.
Can't COPY	• The following judgement is made according to the channel status of digital signal which was input from D-IN during REC-PAUSE or REC-PLAY. (1) Other than audio signal (2) Other than signals of home-use appliances (3) Copy NG due to inversion of copy bit in CD.	• Check whether CD is copy-inhibited one. (An exabple: CD-R)
Din UNLOCK	• The digital signal which was input from D-IN during REC-PAUSE, REC-PLAY or CD FUNC playback caused the following. (1) PLL of digital IN was unlocked. (2) Locking occurred in condition other than FS = 44.1 kHz	• Check whether there is any abnormality in the D-IN signal line.
TOC FULL	• There were no areas to record music or character infomation.(music name, disc name, etc.) during REC-PLAY. • When an attempt to start is made, recordable area does not remain.	• Replace the disc with a recording/ playback disc in which an area to register UTOC remains.
UTOC ERR R	• ETNO > LTNO • FTNO ≠ 0 or 1 • UTOC recorded on disc could not be read.	• UTOC data is not normal. Replace the disc with other disc.
UTOC ERR A	• Start address > End address	• UTOC data is not normal. Replace the disc with other disc.
UTOC ERR L0~4	• Any data of UTOC 0 to 4 looped.	• UTOC data is not normal. Replace the disc with other disc.
NOT AUDIO	• Nonaudio data was recorded in the track mode of currently selected TNO.	• Select other TNO or replace the disc with other disc.
? DISC	• Data "MINI" of system ID which has been written in TOC with ASCII code is not correct. • The disc type written i TOC does not correcpond to pre/ mastered MD, recording MD and hybrid MD.	• The loaded disc is not applicable. Replace the disc, and check.
DISC FULL	• When an attempt to set REC-PAUSE was made, there were no recordable areas.	• Replace the disc with other recording disc in which recording area remains.
PLAYBACK MD	• An attempt to set REC-PAUSE or to start editing was made on the playback-only disc.	• The loaded disc is a Playback-only disc. Replace the disc with a recording disc.
PROTECTED	• An attempt to record or edit was made on the record/playback disc with its careless rease preventing tab being in rease preventing state. • An attempt was made t oedit the track which was write-protected by information written in UTOC.	• Return the careless erase preventing tab to its initial position, and redo. • The track on which an attempt to edit was made is a write-protected track. Redo on another track.
Can't EDIT	• Specific editing conditions were not satisfied.	• The applied operation procedure is not proper. Redo, applying the ocrrect procedure.
TEMP OVER	• Owing to occurrence of some trouble internal temperature of set (MD unit) rose excessively.	• Check by troubleshooting. • Check whether the ambient temperature is too high.
DISC ERR RD PA WR	• Read data was not correct or data could not be read correctly. • Trouble occurred during recording if music data, resulting in record failure.	• Data of TOC or UTOC is not normal or disc las flaw. Replace the disc with other disc.

TROUBLE SHOOTING

Error display	Errors	Corrective action
TOC ERR S TOC ERR R TOC ERR T	• TOC was read but data was not correct. • TOC could not be rad.	• The TOC information recorded on disc does not conform to the MD standard. Replace the disc with other disc. • The disc has flaw. Replace the disc with other disc.
UTOC W ERR	• Trouble occurred during rewriting of UTOC, resulting in UTOC rewriting failure.	• The disc has flaw. Replace the disc with other disc.
FOCUS ERROR	• After the disc was loaded, focusing failure occurred.	• Check that the disc is free from flaw, dust, fingerprint and black spot. Check for disc disalignment and run-out.
BLANK MD	• UTOC was read but total TNO and the number of characters of NAME was 0?	• Perform recording to check that the disc is recordable disc.
DEFECT	• Focusing error was caused by shock during REC-PLAY.	• Check that the disc is free from flaw, dust, fingerprint and black spot. Check for disc disalignment and run-out.
TOC W ERROR	• Although UTOC can be read but UTOC cannot be rewritten.	• Check that the record head contact is normal. Check that there is no broken wire between PWB and the recording head.
MD ERROR	• Data of EEPROOM is not correct.	• Once reset, and redo. If error occurs persistently, replace EEPROM.

EXPLANATION OF MECHANISM ERROR

Error display	Errors
M E C H A _ E R R 1 _ * M E C H A _ E R R 2 _ * M E C H A _ E R R 3 _ *	Ejection failure Head-up failure Head-down failure

	HINF (IC1401 97 PIN)
* = E Ejection completion position	< 1.3 V
* = M Horizontal midway position	> 3.06 V
* = L Load completed position	1.853~2.48 V
* = D Head-down position	1.3~1.853 V

TROUBLE SHOOTING

When MD fails operate

If the objective lens of optical pickup is contaminated, MD may fail to operate. At first, clean the objective lens to check playback operation. If MD fails persistently to operate, perform checks as follows.
If dust or foreign substance is accumulated on the pickup lens, playback is disturbed and indication of TOC (content of tracks) may be disabled. Before adjusting check that the lens is clean. If the lens is contaminated, treat it as follows.

Turn off power supply, impregnate the lens cleaning paper with a small quantity of isopropyl alcohol, and gently wipe the lens with it with due care so that the lens is not damaged. At this time do not touch the lens directly with your finger.

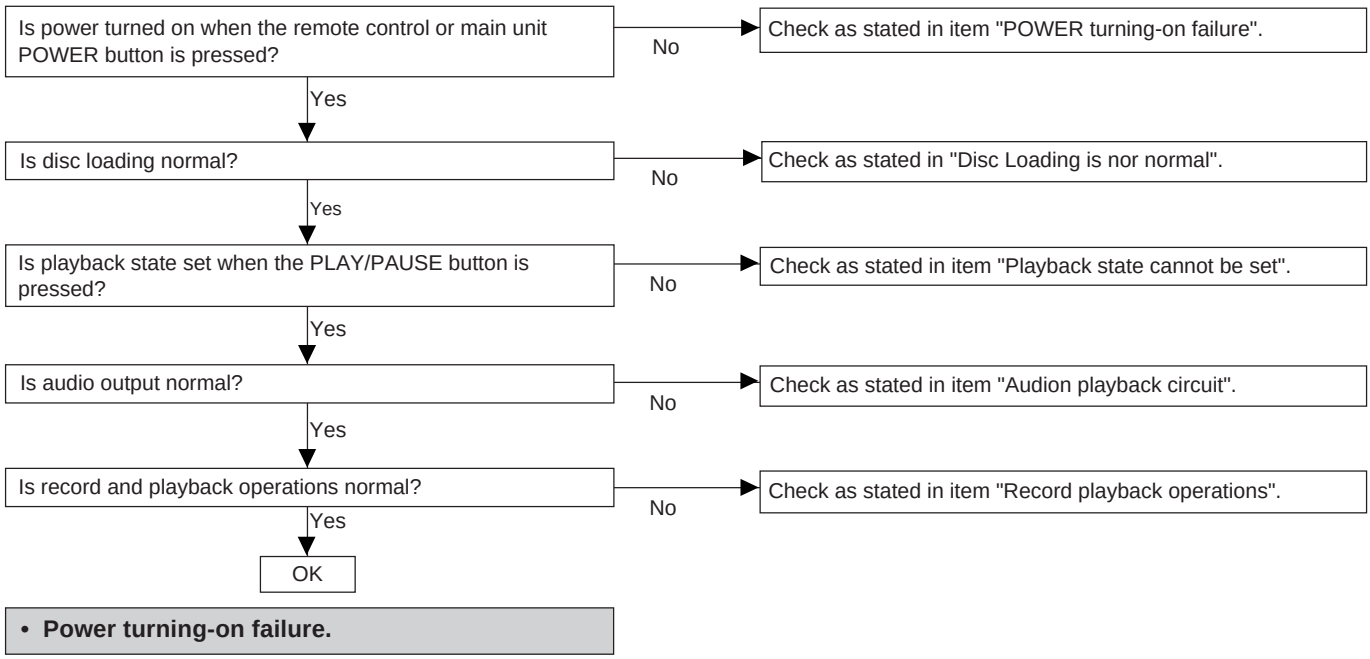

- **Power turning-on failure.**

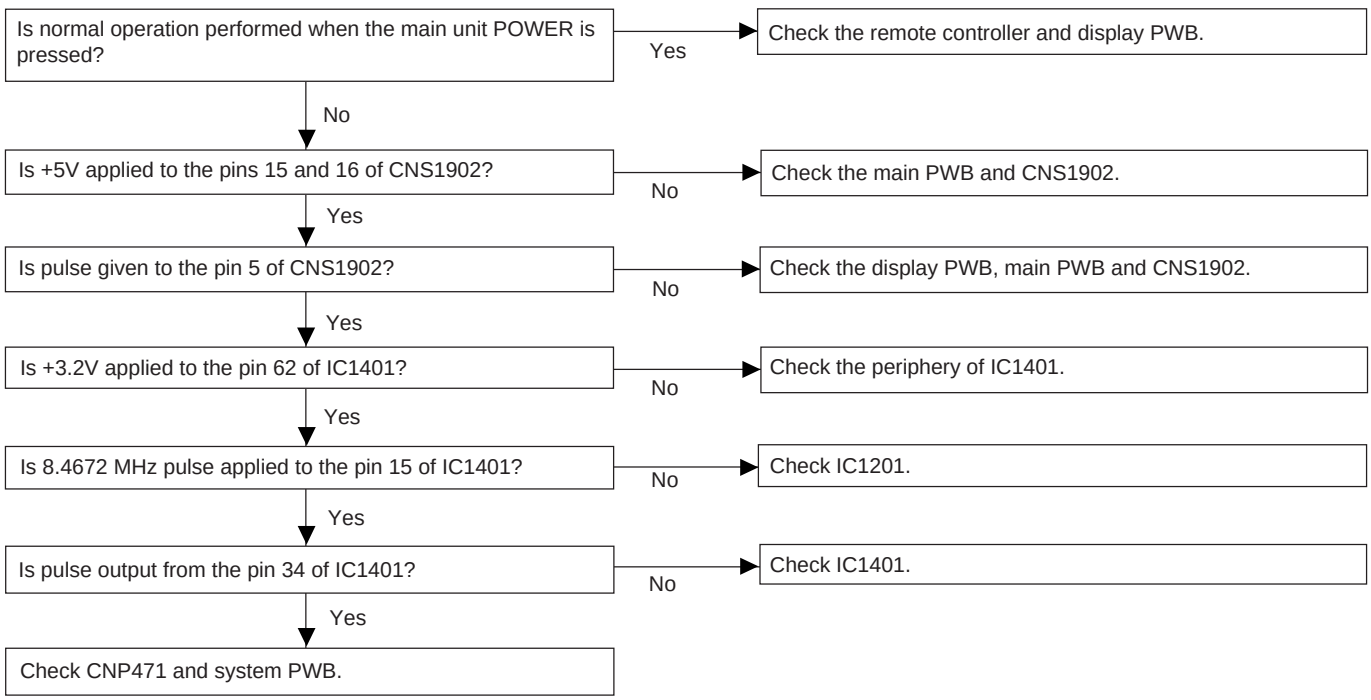

TROUBLE SHOOTING

• Disc loading is not normal.

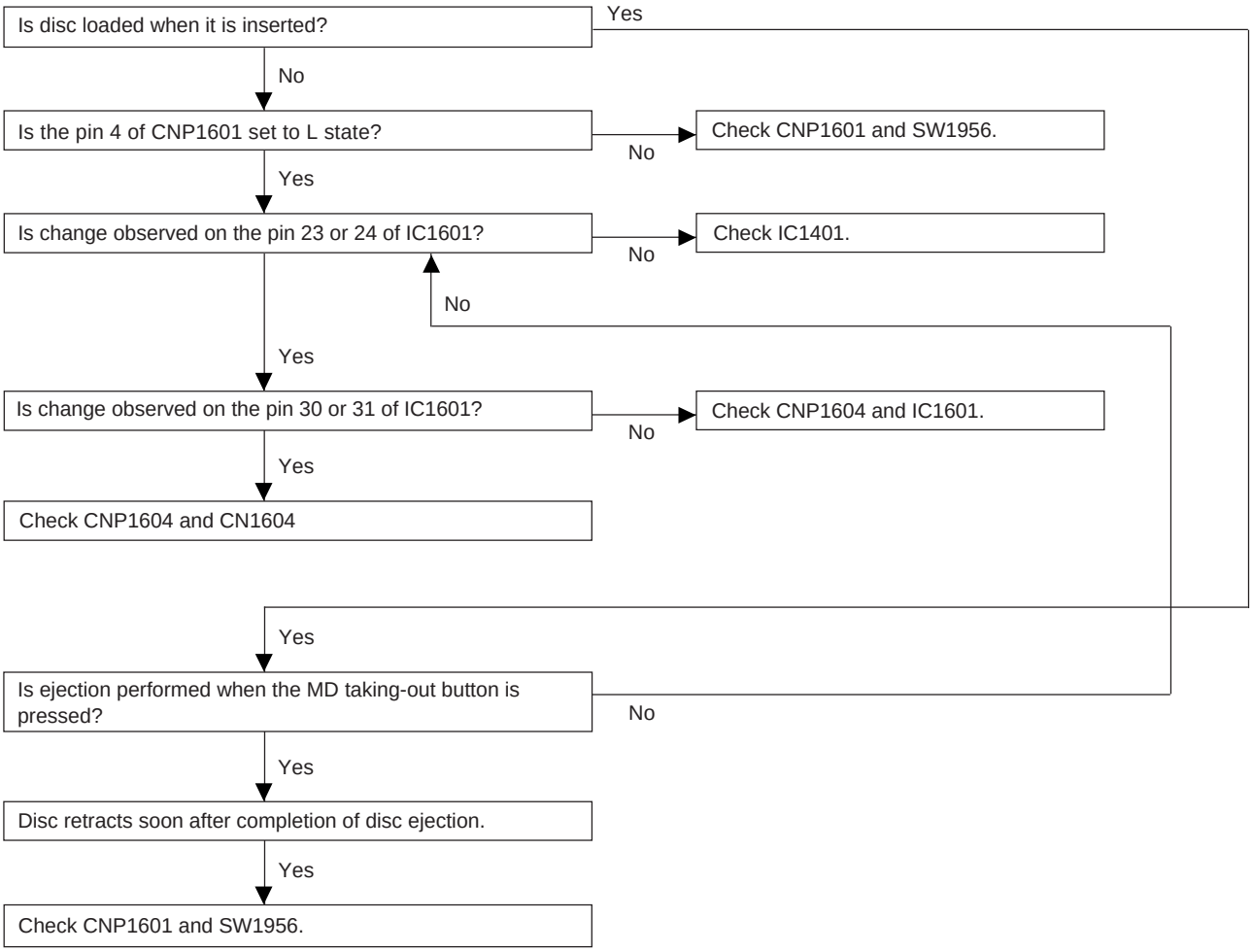

• Playback state cannot be set.

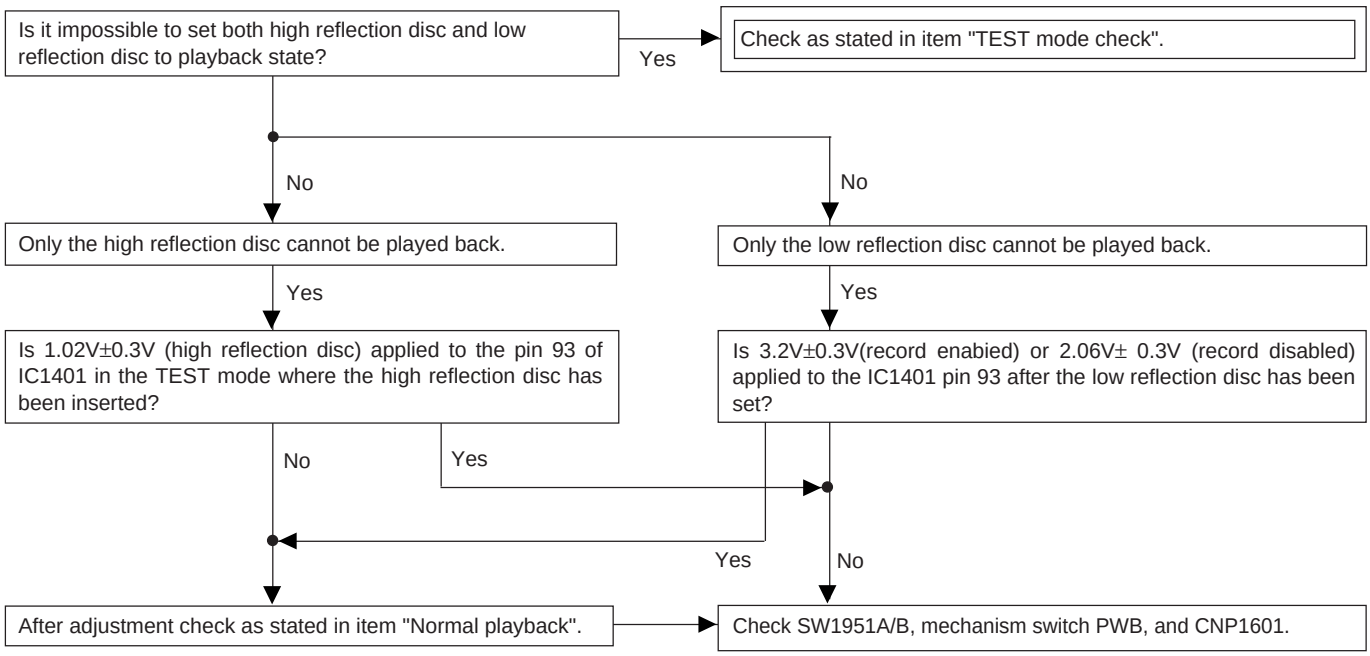

TROUBLE SHOOTING

• Normal playback

When it has been confirmed that EEPROM value is normal in the TEST mode

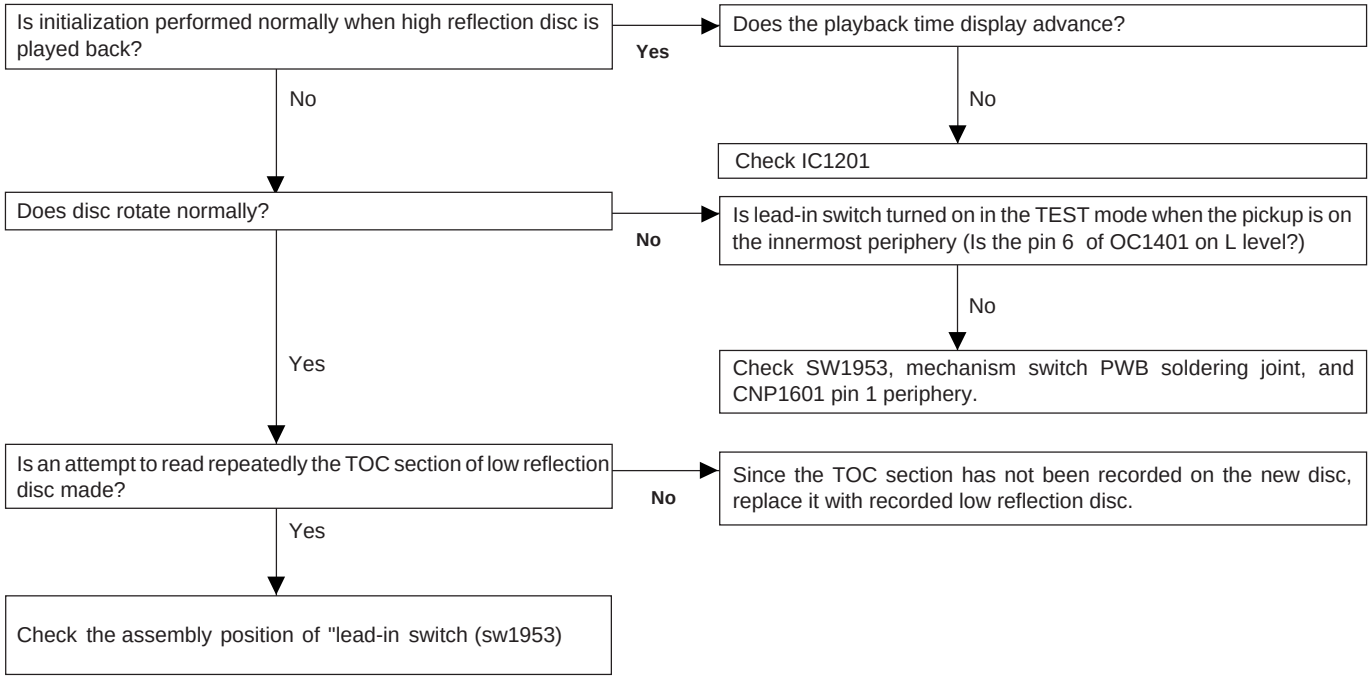

• Audio playback circuit

(Except DM-3090)

When sound is not output although the playback time display advances during playback in the normal mode.

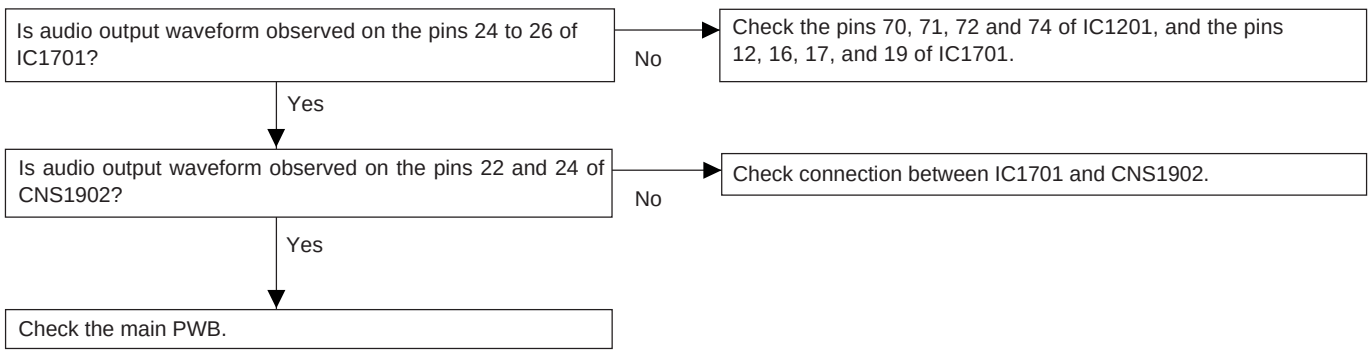

TROUBLE SHOOTING

• Record and playback operation

Insert the low reflection disc, and after verifying the audio output in the normal mode playback set the record/playback TEST mode

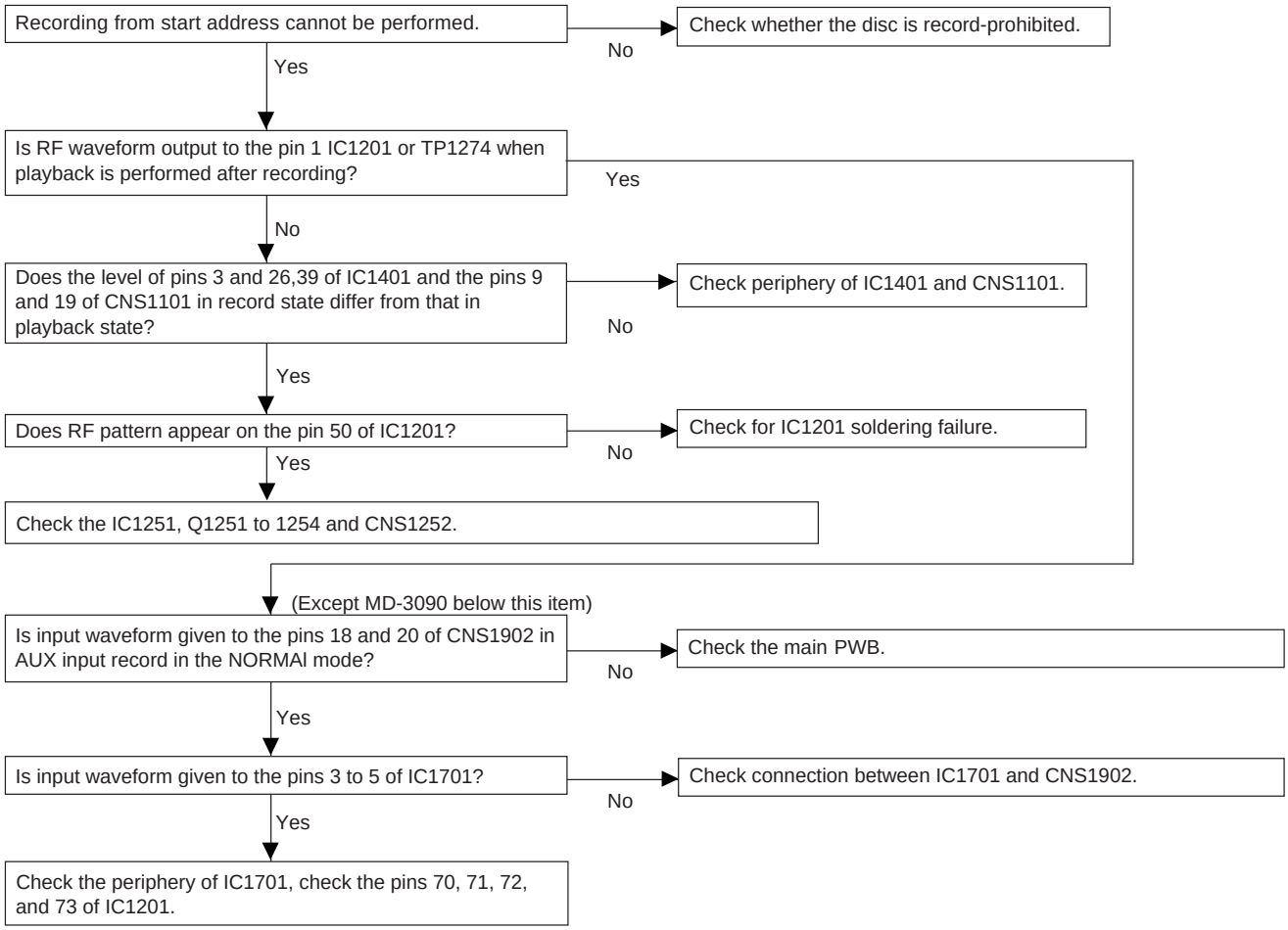

• Focus servo failure

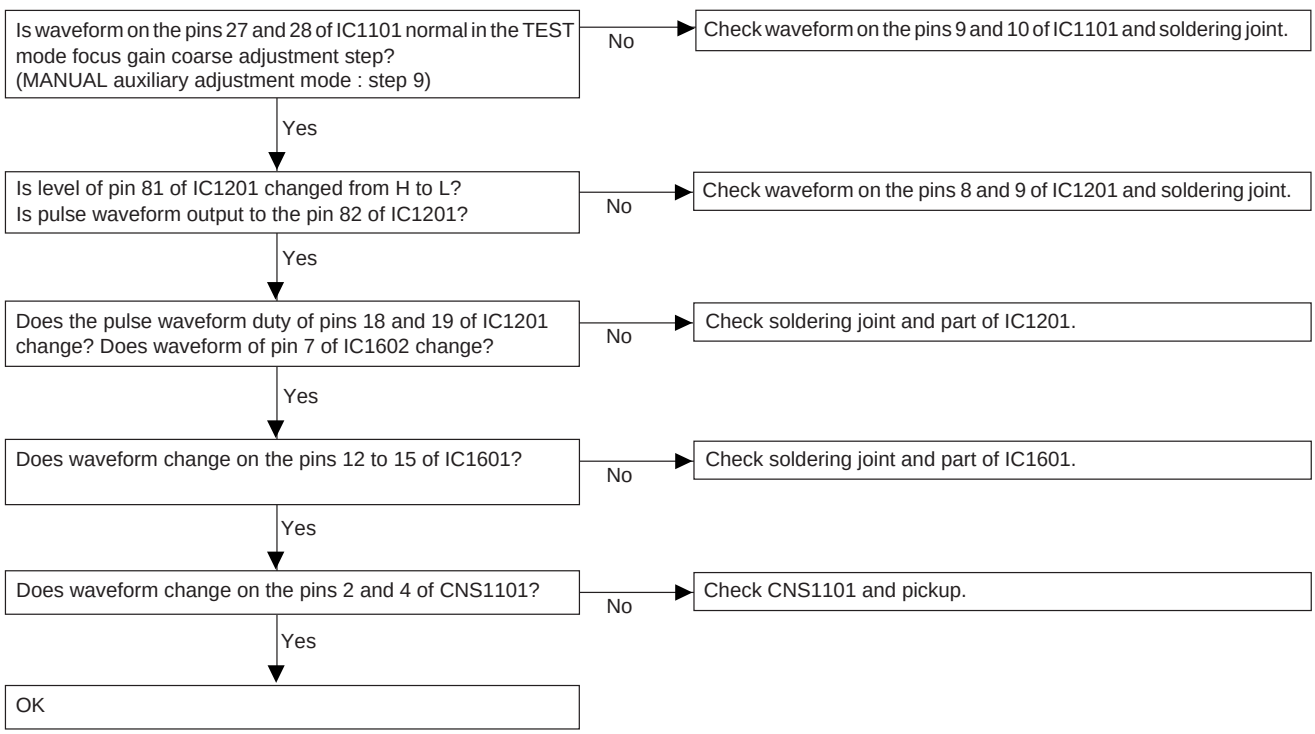

TROUBLE SHOOTING

• Disc motor fails to run

Does waveform appear on the pins 24 and 25 of IC1201 in the TEST mode focus gain coarse adjustment step?

No → Check soldering joint and parts of pins 24 and 25 of IC1201, and peripheral circuit.

Yes ↓

Does waveform appear on the pins 34 and 35 of IC1601, pins 1 and 2 of CNP1603?

No → Check soldering joint of PWB of completed IC1601 and CNP1601 disc motor.

Yes ↓

Replace the completed disc motor.

• Tracking servo failure

Does waveform appear on the pins 8 and 9 of IC1601, and pins 1 and 3 of CNS1101 in the TEST mode focus gain adjustment step?

No → Check the soldering joint of pins 20 and 21 of IC1201, IC1601, IC1601, CNS1101.

Yes ↓

Replace the optical pickup.

• Slide servo failure

Does the pickup move to external and internal periphery when the ▶▶ or ◀◀ button is pressed in the TEST mode?

Yes → Check the waveform on the pins 22 and 23 of IC1201, check the peripheral parts and soldering joint.

No ↓

Is there any change on the pins 22 and 23 of IC1201 when the ▶▶ or ◀◀ button is pressed?

No → Check the waveform on the pins 22 and 23 of IC1201, check the peripheral parts and soldering joint.

Yes ↓

Is there any change on the pins 28 and 29 of IC1601, and the pins 1 and 2 of CNP1602 when the ▶▶ or ◀◀ button is pressed?

No → Check the soldering joint of IC1601 and CNP1602.

Yes ↓

Does voltage on the positive and negative terminals of slide motor change when the ▶▶ or ◀◀ button is pressed?

No → Check the soldering joint connected to the slide motor to see whether there is wire breakage.

Yes ↓

Replace the slide motor.

ADJUSTMENT

MD SECTION

1. Preparation for adjustment

Test disc

	Type	Test disc
1	High reflection disc	TGYS1 (SONY)
2	Low reflection disc	Recording minidisc
3	————————	Head Adjusting transparent

2. Test mode

Test mode setting method

1. Holding down the ENTER button and ►II (PLAY/PAUSE) button, press the RESET button.
   After 3sec, take your hand off the RESET button first.
   (State Ⓐ is changed to state Ⓑ.)
2. Insert the playback disc 1 (high reflection disc) or recording disc 2 (low reflection disc).
   (During disc loading : display LOADING) (State Ⓒ is set.)
   Thus, the test mode state is set.

Ⓐ tsm ○○○○e○○ : TEST MODE ○○ represents version of MD microcomputer.
TEST STOP state (When the ■(STOP) button is ressed in the Ⓒ state, the indication Ⓐ is restored. To restore Ⓒ again, press the ENTER button.)
↓
Ⓑ EJECT TEST
↓
Ⓒ AUTO TEST

Entering the specific mode

Whenever the ENTER button is pressed, the mode is changed.

AUTO pre-adjustment → AUTO adjustment → RESULT SUB → RESULT →
EEPROM setting ← MANUAL adjustment ← MANUAL pre-adjustment ←

• Canceling the test mode

When the POWER button is pressed, the test mode is canceled, and the POWER OFF state is set.

• Test Mode

1. AUTO pre-adjustment mode	• Automatic pre-adjustment is performed. (After adjustment the grating adjustment mode is set.) • The adjustment value is output with the aid of system controller interface.
2. AUTO adjustment mode	• Automatic adjustment is performed. • The adjustment value is output with the aid of system controller interface. • Continuous playback is performed. (Error rate indication, jump test)
3. RESULT sub-mode	• The measurement value, set value and calculated value are indicated. • The set value is changed manually (in servo OFF state).
4. RESULT mode (final adjustment)	• The set value (after calculation) is indicated. • The set value is changed manually (in servo OFF state).
5. MANUAL pre-adjustment mode	• RF side manual adjustment is performed. • Focus and tracking signal ATT manual adjustment is performed. • Focus and tracking signal offset setting is performed.
6. MANUAL adjustment mode	• Focus and tracking signal ATT manual adjustment is performed.
7. EEPROM setting mode	• This mode does not use on the occasion of service.
8. TEST-PLAY mode	• Continuous playback from the specified address is performed. • C1 error rate measurement, ADIP error rate measurement.
9. TEST-REC mode	• Continuous recording from the specified address is performed. • Change of record laser output (servo gain is also changed according to laser output)
10. EJECT mode	• TEMP setting (of EEPROM setting) • CONTROL setting (of EEPROM setting) • Setting of laser power (record/playback power)

ADJUSTMENT

1. AUTO pre-adjustment mode (Low reflection disc only)

Step No.	Setting Method	Remarks	Display
Step 1	Testmode STOP state		[t s m○○○○ e ○○]
Step 2	Press once the ENTER button.	AUTO pre-adjustment menu	[A U T O]
Step 3	Press once the MD PLAY button. End of adjustment	The slide moves to the innermost periphery, and automatic pre-adjustment is started. • During automatic adjustment ✳✳✳ changes as follows. HAo→RFg→SAg→SBg→PTG→PCH→GTG→GCH→RCG→SEG→RFG→SAG→HAO→HEO→TCO→LAO If adjustment is OK, Step 4. If adjustment is NG, Step 5.	[✳✳✳ : _ _ _ _ _ _]
Step 4	Grating adjustment, adjustment value output Press once the MD STOP button.	 STEP 2	[_ C O M P L E T E _]
Step 5	Adjustment value output Press once the MD STOP button.	 STEP 2 AUTO pre-adjustment menu	[AUTO]

• ✳✳✳ : Adjustment name, □□□□ : Address

2. AUTO adjustment mode

Step No.	Setting Method	Remarks	Display
Step 1	Testmode STOP state		[t s m○○○○ e ○○]
Step 2	Press the ENTER button two times.	AUTO adjustment menu	[A U T O _ A J S T _]
Step 3	Press once the MD PLAY button. End of adjustment	The slide moves to the innermost periphery, and automatic adjustment is started. • In case of high reflection disc ✳✳✳ changes as follows. PEG→HAG •In case of low reflection disc ✳✳✳ changes as follows. PEG→LAG→GCG→GEG→LAG If adjustment is OK, Step 4. If adjustment is NG, Step 7.	[✳✳✳ : _ _ _ _ _ _]
Step 4	Adjustment value output Press the MD PLAY button. Press the MD STOP button.	 STEP 5 STEP 2	[_ C O M P L E T E _]
Step 5	Continuous playback (pit section) Continuous playback (groove section)		[s□□□□c○○○○] [a□□□□c○○○○]
Step 6	Press the DISPLAY button. Press the MD STOP button.	Continuous playback (groove section) STEP 2 AUTO adjustment menu	[a□□□□a○○○○]
Step 7	Adjustment value output Press the MD STOP button.	 STEP 2 AUTO adjustment menu	[C a n ' t _ A D J .]

• ✳✳✳ : Adjustment name, ○○ : Measurement value, □□□□ : Address

ADJUSTMENT

3. RESULT sub-mode

Step No.	Setting Method	Remarks	Display
Step 1	Testmode STOP state		[t s m○○○○ e ○○]
Step 2	Press the ENTER button three times.	RESULT sub-menu	[_ R S T _ Y O B I _]
Step 3	Press once the MD PLAY button.	Indication of measurement value	[R F G : _ ○○ _ _●]
Step 4	Press once the ENTER button.	Indication of measurement value	[R C G : _ ○○ _ _●]
Step 5	Press once the ENTER button.	Indication of measurement value	[R T G : _ _ _ _ _ ●]
Step 6	Press once the ENTER button.	Indication of measurement value	[G T G : _ _ _ _ _ ●]
Step 7	Press once the ENTER button.	Indication of measurement value	[P C H : _ _ _ _ ●●]
Step 8	Press once the ENTER button.	Indication of measurement value	[G C H : _ _ _ _ ●●]
Step 9	Press once the ENTER button.	Indication of measurement value	[S A G : _ _ _ ●●●]
Step 10	Press once the ENTER button.	Indication of measurement value	[S B G : _ _ _ ●●●]
Step 11	Press once the ENTER button.	Indication of measurement value	[S E G : _ _ _ ●●●]
Step 12	Press once the ENTER button.	Indication of measurement value	[S F G : _ _ _ ●●●]
Step 13	Press once the ENTER button.	Indication of measurement value	[H A O : ○○○ _ _ _]
Step 14	Press once the ENTER button.	Indication of measurement value	[H B O : ○○○ _ _ _]
Step 15	Press once the ENTER button.	Indication of measurement value	[H E O : ○○○ _ _ _]
Step 16	Press once the ENTER button.	Indication of measurement value	[H F O : ○○○ _ _ _]
Step 17	Press once the ENTER button.	Indication of measurement value	[L A O : ○○○ _ _ _]
Step 18	Press once the ENTER button.	Indication of measurement value	[L B O : ○○○ _ _ _]
Step 19	Press once the ENTER button.	Indication of measurement value	[L E O : ○○○ _ _ _]
Step 20	Press once the ENTER button.	Indication of measurement value	[L F O : ○○○ _ _ _]
Step 21	Press once the ENTER button.	Indication of measurement value	[T C O : _ ○○ _ _ _]
Step 22	Press once the ENTER button.	Indication of adjustment error sequence No.	[Y O B : _ □□ _ _ _]
Step 23	Press once the ENTER button.	Indication of adjustment status	[D I F : _ □□ _ _ _]
Step 24	Press once the ENTER button.	Indication of pre-adjustment not completed (00)/completed (4B)	[A D J : _ □□ _ _ _]
Step 25	Press once the MD STOP button.	RESULT sub-menu state	[_ R S T _ Y O B I _]

• ○○ : Measurement value, ●● : Adjustment value, □□ : Other various informations
• ressing the REC button causes reversing.
• When the jog key is turned upward while the setting is displayed, the setting increases, and a new setting is stored in RAM.
• When the jog key is turned downward while the setting is displayed, the setting increases, and a new setting is stored in RAM.

4. RESULT mode (final adjustment)

Step No.	Setting Method	Remarks	Display
Step 1	Testmode STOP state		[t s m○○○○ e ○○]
Step 2	Press the ENTER button four times.	RESULT menu	[_ R S T U L T _ _ _]
Step 3	Press once the MD PLAY button.	Indication of set value	[H A G : _ _ _ ●●●]
Step 4	Press once the ENTER button.	Indication of set value	[H B G : _ _ _ ●●●]
Step 5	Press once the ENTER button.	Indication of set value	[L A G : _ _ _ ●●●]
Step 6	Press once the ENTER button.	Indication of set value	[L B G : _ _ _ ●●●]
Step 7	Press once the ENTER button.	Indication of set value	[P E G : _ _ _ ●●●]
Step 8	Press once the ENTER button.	Indication of set value	[P F G : _ _ _ ●●●]
Step 9	Press once the ENTER button.	Indication of set value	[G E G : _ _ _ ●●●]
Step 10	Press once the ENTER button.	Indication of set value	[G F G : _ _ _ ●●●]
Step 11	Press once the ENTER button.	Indication of set value	[G C G : _ _ _ _ ●●]
Step 12	Press once the MD STOP button.	RESULT menu state	[_ R E S U L T _ _ _]

• ●● : Measurement value
• ressing the REC button causes reversing.
• When the jog key is turned upward while the setting is displayed, the setting increases, and a new setting is stored in RAM.
• When the jog key is turned downward while the setting is displayed, the setting increases, and a new setting is stored in RAM.

ADJUSTMENT

5. MANUAL auxiliary adjustment mode (only low reflection disc)

Step No.	Setting Method	Remarks	Display
Step 1	Testmode STOP state		[t s m○○○○ e ○○]
Step 2	Press the ENTER button five times.	MANUAL auxiliary adjustment mode	[_ M N U _ Y O B I _]
Step 3	Press once the MD PLAY button.	Initial setting → Temperature measuring mode	[T M P : _ △△ _ _ _]
Step 4	Press once the ENTER button.	Offset "0" setting → A signal offset tentative measurement	[H A o : △△△ _ _ _]
Step 5	Press once the ENTER button.	B signal offset tentative measurement	[H B o : △△△ _ _ _]
Step 6	Press once the ENTER button.	E signal offset tentative measurement	[H E o : △△△ _ _ _]
Step 7	Press once the ENTER button.	F signal offset tentative measurement	[H F o : △△△ _ _ _]
Step 8	Press once the ENTER button.	Offset tentative measurement → Laser ON	[L O N : _ _ _ _ _ _]
Step 9	Press once the ENTER button.	Innermost periphery move → RF side FG rough adjustment	[R F g : △△△ _ _ ●]
Step 10	Press once the ENTER button.	Focus ATT (A signal) tentative setting	[S A g : △△△○○○]
Step 11	Press once the ENTER button.	Focus ATT (B signal) tentative setting	[S B g : △△△○○○]
Step 12	Press once the ENTER button.	RF side pit section TG adjustment	[P T G : △△△ _ _ ●]
Step 13	Press once the ENTER button.	Pit section COUT level setting	[P C H : △△△ _ ○○]
Step 14	Press once the ENTER button.	Outer periphery move → RF side groove TG adjustment	[G T G : △△△ _ _ ●]
Step 15	Press once the ENTER button.	Groove section COUT level setting	[G C H : △△△ _ ○○]
Step 16	Press once the ENTER button.	RF side TCRS adjustment	[R C G : △△△ _ _ ●]
Step 17	Press once the ENTER button.	Tracking ATT (A signal) setting	[S E G : △△△○○○]
Step 18	Press once the ENTER button.	Tracking ATT (B signal) setting	[S F G : △△△○○○]
Step 19	Press once the ENTER button.	Indication of tracking EFMIO measurement	[g M I : △△△ _ _ _]
Step 20	Press once the ENTER button.	RF side pit section FG adjustment	[R F G : △△△ _ _ ●]
Step 21	Press once the ENTER button.	Focus ATT (A signal) setting	[S A G : △△△○○○]
Step 22	Press once the ENTER button.	Focus ATT (B signal) setting	[S B G : △△△○○○]
Step 23	Press once the ENTER button.	Offset "0" setting → A signal offset measurement	[H A O : △△△ _ _ _]
Step 24	Press once the ENTER button.	B signal offset measurement	[H B O : △△△ _ _ _]
Step 25	Press once the ENTER button.	E signal offset measurement	[H E O : △△△ _ _ _]
Step 26	Press once the ENTER button.	F signal offset measurement	[H F O : △△△ _ _ _]
Step 27	Press once the ENTER button.	TCRS signal offset measurement	[T C O : △△△ _ _ _]
Step 28	Press once the ENTER button.	A signal offset measurement	[L A O : △△△ _ _ _]
Step 29	Press once the ENTER button.	B signal offset measurement	[L B O : △△△ _ _ _]
Step 30	Press once the ENTER button.	E signal offset measurement	[L E O : △△△ _ _ _]
Step 31	Press once the ENTER button.	F signal offset measurement	[L F O : △△△ _ _ _]

• △△△ : Measurement value, ● : Set value, ○○○ : Account value
• If the jog key upward/downward is pressed during setting indication, the setting increases/decreases, and the new setting is stored in RAM.
• If the REC button is pressed, the setting returns step by step excepting the following case.
A signal offset (HAO) → Offset tentative setting → RF side FG adjustment (RFG)
RF side TCRS adjustment (RCG) → RF side groove TG adjustment (GTG)
RF side groove TG adjustment (GTG) → Innermost periphery move → RF side pit section adjustment (PTG)
RF side pit TG adjustment (PTG) → RF side FG rough adjustment (RFg) → Laser lighting (LON)
Laser lighting (LON) → Offset "0" setting → A signal offset tentative measurement (HAo)
If the measurement value is within the OK range, " ✳ " appears on the 8th character.

6. MANUAL adjustment mode
High reflection disc

Step No.	Setting Method	Remarks	Display
Step 1	Testmode STOP state		[t s m○○○○ e ○○]
Step 2	Press the ENTER button six times.	MANUAL adjustment menu	[_ M N U _ A J S T _]
Step 3	Press once the MD PLAY button.	Initial setting → Temperature measuring mode	[T M P : _ △△ _ _ _]
Step 4	Press once the ENTER button.	Laser ON	[L O N : _ _ _ _ _ _]
Step 5	Press once the ENTER button.	Innermost periphery move → Tracking ATT (E signal) setting	[P E G : △△△○○○]
Step 6	Press once the ENTER button.	Tracking ATT (F signal) setting	[P F G : △△△○○○]
Step 7	Press once the ENTER button.	Indication of tracking EFMIO measurement	[P M I : △△△ _ _ _]
Step 8	Press once the ENTER button.	Focus ATT (A signal) setting	[H A G : △△△○○○]
Step 9	Press once the ENTER button.	Focus ATT (B signal) setting	[H B G : △△△○○○]

• If the MD STOP button is pressed while the MANUAL adjustment menu is displayed, the state is changed to the TEST mode STOP state.
• If the REC button is pressed, the setting returns step.

ADJUSTMENT

7. High reflection disc

Step No.	Setting Method	Remarks	Display
Step 1	Testmode STOP state		[t s m○○○ e ○○]
Step 2	Press the ENTER button six times.	MANUAL adjustment menu	[_ M N U _ A J S T _]
Step 3	Press once the MD PLAY button.	Initial setting → Temperature measuring mode	[T M P : _ △△ _ _ _]
Step 4	Press once the ENTER button.	Laser ON	[L O N : _ _ _ _ _ _]
Step 5	Press once the ENTER button.	Innermost periphery move → Tracking ATT (E signal) setting	[P E G : △△△○○○]
Step 6	Press once the ENTER button.	Tracking ATT (F signal) setting	[P F G : △△△○○○]
Step 7	Press once the ENTER button.	Indication of tracking EFMIO measurement (pit section)	[P M I : △△△ _ _ _]
Step 8	Press once the ENTER button.	Focus ATT (A signal) setting	[L A g : △△△○○○]
Step 9	Press once the ENTER button.	Focus ATT (B signal) setting	[L B g : △△△○○○]
Step 10	Press once the ENTER button.	Outside periphery move → Track closs setting	[G C G : △△△○○○]
Step 11	Press once the ENTER button.	Tracking ATT (E signal) setting	[G E G : △△△○○○]
Step 12	Press once the ENTER button.	Tracking ATT (F signal) setting	[P F G : △△△○○○]
Step 13	Press once the ENTER button.	Indication of tracking EFMIO measurement (groove section)	[G M I : △△△ _ _ _]
Step 14	Press once the ENTER button.	Focus ATT (A signal) setting	[L A G : △△△○○○]
Step 15	Press once the ENTER button.	Focus ATT (B signal) setting	[L B G : △△△○○○]

- If the MD STOP button is pressed while the MANUAL adjustment menu is displayed, the state is changed to the TEST mode STOP state.
- If the REC button is pressed, the setting returns step by step excepting the following case.
  Track close ATT setting (GTG) → Innermost periphery move → Focus ATT (B signal) setting (LBg)

8. TEST-PLAY mode

Step No.	Setting Method	Remarks	Display
Step 1	Testmode STOP state		[t s m○○○ e ○○]
Step 2	Press the TIMER/DELETE button.	TEST-PLAY menu	[T E S T _ P L A Y _]
Step 3	Press once the DISPLAY/ CHARAC button. Press once the MD PLAY button.	ADRES setting (Target address initial value is indicated) During search the search output pin 11 is set to "H", and it is returned to "L" when continuous playback is started.	[A D R E S _ 0 0 5 0]
Step 4	Continuous playback (pit section) Continuous playback (groove section)	(Address + C1 error indication) (Address + C1 error indication)	[s □□□□ c ○○○○] [a □□□□ c ○○○○]
Step 5	Press once the DISPLAY button.	(Address + ADIP error indication)	[a □□□□ a ○○○○]
Step 6	Press once the MD STOP button.	TEST-PLAY menu	[T E S T _ P L A Y _]

- If the MD STOP button is pressed while the TEST-PLAY menu is displayed, TEST mode STOP state is set.
- If the MD PLAY button is pressed while the TEST-PLAY menu is displayed, continuous playback is started from the current pickup position.
- Whenever the TIMER/DELETE button is pressed in the address setting mode, the address changes as follows.
  0 0 5 0 → 0 3 0 → 0 7 0 0 → 0 8 A 0 → 0 0 5 0 → ……
- Whenever the TIMER/DELETE button is pressed in the address setting mode, the digit which is changed with - ⏮ / ⏭ + changes as follows.
  0 0 5 0 → 0 0 5 0 → 0 0 5 0 → 0 0 5 0 → ……
- The digit of address which has been specified with - ⏮ / ⏭ + and DISPLAY/CHARACTER button in the address setting mode is set to +01H/ -01H.
  * If the - ⏮ / ⏭ + button is held down, the setting changes continuously with 100 ms cycle.
- If the TRACK EDIT button is pressed in the continuous playback mode, the number of jump lines changes as follows.
  1 line → 10 line → 400 line → 1 line → ……
  * After the number of jump lines is indicated for one second, the address indication is restored. [▲▲▲T R _ J U M P]
- If the - ⏮ / ⏭ + button is pressed in the continuous playback mode, the specified number of lines is jumped in the FWD/REV direction.
  * If the - ⏮ / ⏭ + button is held down, the setting changes with 100 ms cycle.
- Whenever the CD STOP button is pressed in the continuous playback mode, the indication changes as follows.
  * Pit section Continuous playback (SUBQ address indication + C1 error indication) remains.
  * Groove section Continuous playback (ADIP address indication + C1 error indication) remains.
    ↓
    Continuous playback (ADIP address indication + ADIP error indication) remains.
    ↓
    Continuous playback (ADIP address indication + C1 error indication) remains.
    ↓
    ⋮

• □□□□ : Adress, ○○○○ : Error late, ▲▲▲ : Jump lines

ADJUSTMENT

9. TEST-REC mode

Step No.	Setting Method	Remarks	Display
Step 1	Testmode STOP state		[t s m○○○○ e ○○]
Step 2	Press the TIMER/DELETE button.	TEST-REC menu	[T E S T _ R E C _ _]
Step 3	Press once the DISPLAY/ CHARAC button.	ADRES setting (indication of address initial value)	[a 0 0 5 0 _ p w ▽▽]
Step 4	Press once the MD PLAY button.	During search the search output pin 11 is set to "H", and it is (returned on "L" when continuous playback is started.Address + C1 error indication) Continuous recording	[a □□□□ p w ▽▽]
Step 5	Press once the MD STOP button.	TEST-REC menu	[T E S T _ R E C _ _]

- If the MD STOP button is pressed while the TEST-PLAY menu is displayed, TEST mode STOP state is set.
- If the MD PLAY button is pressed while the TEST-REC menu is displayed, continuous record is started from the current pickup position.
- Whenever the TIMER/DELETE button is pressed in the address setting mode, the address changes as follows.
  0 0 5 0 → 0 3 C 0 → 0 7 0 0 → 0 8 A 0 → 0 0 5 0 → .....
- Whenever the DISPLAY/CHARACTER button is pressed in the address setting mode, the digit which is changed with - ⏮ / ⏭ + changes as follows.
  0 0 5 0 → 0 0 5 0 → 0 0 5 0 → 0 0 5 0 → .....
- The digit of address which has been specified with - ⏮ / ⏭ + and DISPLAY/CHARACTER button in the address setting mode is set to +01H/ -01H.
  * If the - ⏮ / ⏭ + button is held down, the setting changes continuously with 100 ms cycle.
- If the JOG button is pressed in TEST-REC mode and continuous record mode, the laser record power changes. (Servo gain changes also according to the record power.)
- □□□□ : Adress, ▽▽ : Laser power cord

10. EJECT mode

Step No.	Setting Method	Remarks	Display
Step 1	Testmode EJECT state	Eject of MD disc	[_ _ E J E C T _ _ _]
Step 2	Press oncethe TIME DISPLAY button.	Max. power output state	[x p w _ _ _ _ _ _ _]
Step 3	Press once the TIME DISPLAY button.	Record power output state	[r p w _ _ _ _ _ _ _]
Step 4	Press once the DISPLAY CHARACTER button.	Playback power output state	[p p w _ _ _ _ _ _ _]
Step 5	Press the STOP button.	EJECTMENU	
Step 6	Press the NAME/TOC EDIT button.	CONTROL setting of EEPROM setting (Refer to CONTROL setting of EEPROM)	

ADJUSTMENT

● **Mechanism Adjustment**

1. Optical pickup grating inspecting method

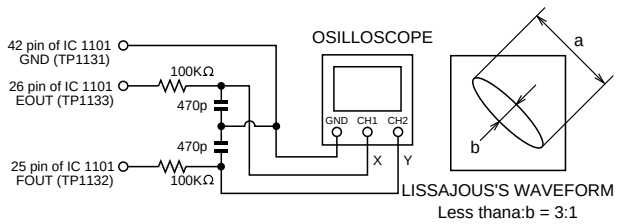

Figure 23-1 Optical Pickup Grating Deviation Measuring Method

After the automatic adjustment is performed in the AUTO mode (test mode) with the aid of high refection MD disc ("COMPLATE" is displayed), the Lissajous's waveform (x-y) is adjusted.

1. Slightly loosen the 3 screws of spindle moto, and maken an adjustment, observing the Lissajous's waveform.
2. After adjustment tighten the screw in arder of ① , ② , ③ .

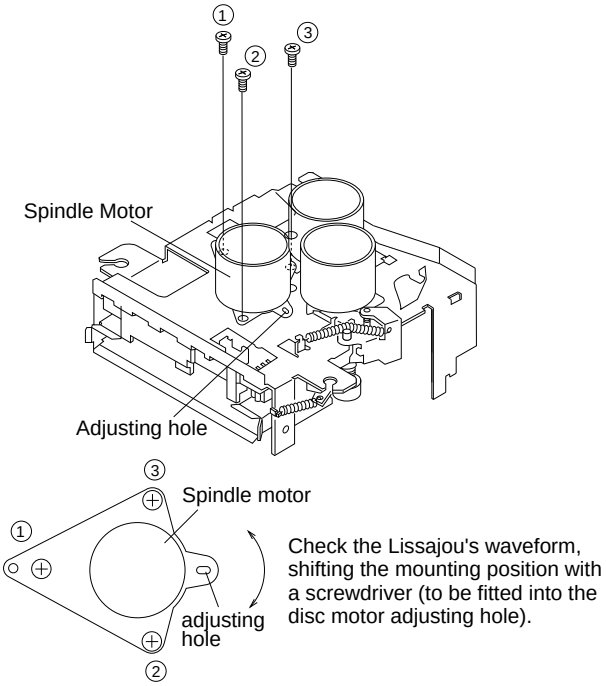

Figure 23-2

2. Jitter adjustment and checking method

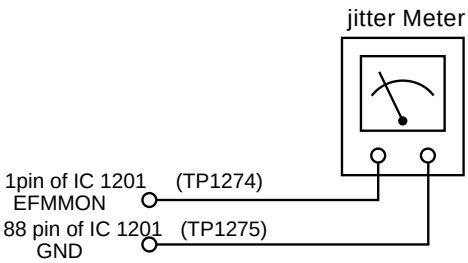

Figure 23-3 Jitter connection diagram

After performing automatic adjustment in AUTO mode of TEST mode using the low reflection MD disc, check this jitter in pit continuous playback and groove continuous playback mode.

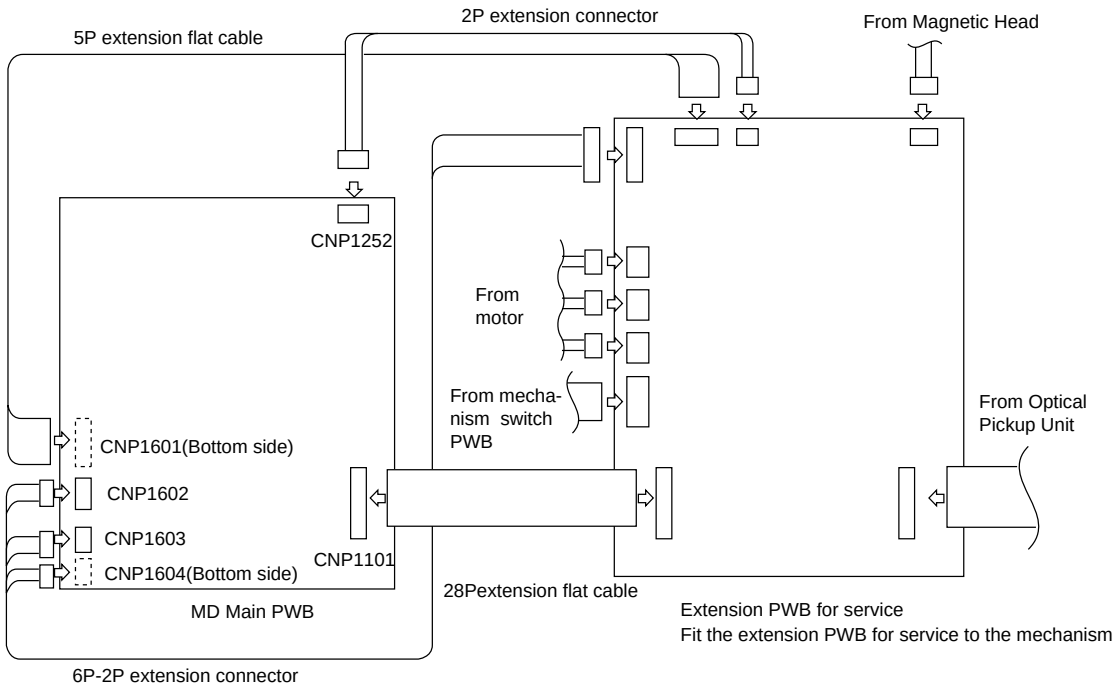

Figure 23-4

PARTS DESCRIPTIONS

CAPACITORS

CC 45 TH 1H 220 J
1 2 3 4 5 6

1 = Type ... ceramic, electrolytic, etc.
2 = Shape ... round, square, ect.
3 = Temp. coefficient
4 = Voltage rating
5 = Value
6 = Tolerance

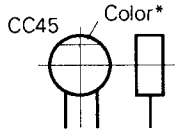

• Capacitor value

010 = 1pF
100 = 10pF
101 = 100pF
102 = 1000pF = 0.001μF
103 = 0.01μF

2 2 0 = 22pF
Multiplier
2nd number
1st number

• Temperature coefficient

1st Word	C	L	P	R	S	T	U
Color*	Black	Red	Orange	Yellow	Green	Blue	Violet
ppm/°C	0	-80	-150	-220	-330	-470	-750

2nd Word	G	H	J	K	L
ppm/°C	±30	±60	±120	±250	±500

Example : CC45TH = -470 ± 60ppm/°C

• Tolerance (More than 10pF)

Code	C	D	G	J	K	M	X	Z	P	No code
(%)	±0.25	±0.5	±2	±5	±10	±20	+40	+80	+100	More than 10μF -10 ~ +50
							-20	-20	-0	Less than 4.7μF -10 ~ +75

(Less than 10pF)

Code	B	C	D	F	G
(pF)	±0.1	±0.25	±0.5	±1	±2

• Voltage rating

2nd word / 1st word	A	B	C	D	E	F	G	H	J	K	V
0	1.0	1.25	1.6	2.0	2.5	3.15	4.0	5.0	6.3	8.0	-
1	10	12.5	16	20	25	31.5	40	50	63	80	35
2	100	125	160	200	250	315	400	500	630	800	-
3	1000	1250	1600	2000	2500	3150	4000	5000	6300	8000	-

• Chip capacitors

(EX) C C 7 3 F S L 1 H 0 0 0 J
1 2 3 4 5 6 7
(Chip) (CH, RH, UJ, SL)

(EX) C K 7 3 F F 1 H 0 0 0 Z
1 2 3 4 5 6 7
(Chip) (B, F)

Refer to the table above.
1 = Type
2 = Shape
3 = Dimension
4 = Temp. coefficient
5 = Voltage rating
6 = Value
7 = Tolerance

Dimension (Chip capacitors)

Dimension code	L	W	T
Empty	5.6 ± 0.5	5.0 ± 0.5	Less than 2.0
A	4.5 ± 0.5	3.2 ± 0.4	Less than 2.0
B	4.5 ± 0.5	2.0 ± 0.3	Less than 2.0
C	4.5 ± 0.5	1.25 ± 0.2	Less than 1.25
D	3.2 ± 0.4	2.5 ± 0.3	Less than 1.5
E	3.2 ± 0.2	1.6 ± 0.2	Less than 1.25
F	2.0 ± 0.3	1.25 ± 0.2	Less than 1.25
G	1.6 ± 0.2	0.8 ± 0.2	Less than 1.0

RESISTORS

• Chip resistor (Carbon)

(EX) R K 7 3 E B 2 B 0 0 0 J
1 2 3 4 5 6 7
(Chip) (B,F)

Dimension

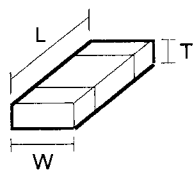

• Carbon resistor (Normal type)

(EX) R D 1 4 B B 2 C 0 0 0 J
1 2 3 4 5 6 7

1 = Type
2 = Shape
3 = Dimension
4 = Temp. coefficient
5 = Rating wattage
6 = Value
7 = Tolerance

Dimension (Chip resistor)

Dimension code	L	W	T
E	3.2 ± 0.2	1.6 ± 0.2	1.0
F	2.0 ± 0.3	1.25 ± 0.2	1.0
G	1.6±0.2	0.8±0.2	0.5±0.1

Rating wattage

Code	Wattage	Code	Wattage	Code	Wattage
1J	1/16W	2C	1/6W	3A	1W
2A	1/10W	2E	1/4W	3D	2W
2B	1/8W	2H	1/2W		

PC BOARD(Component side view)

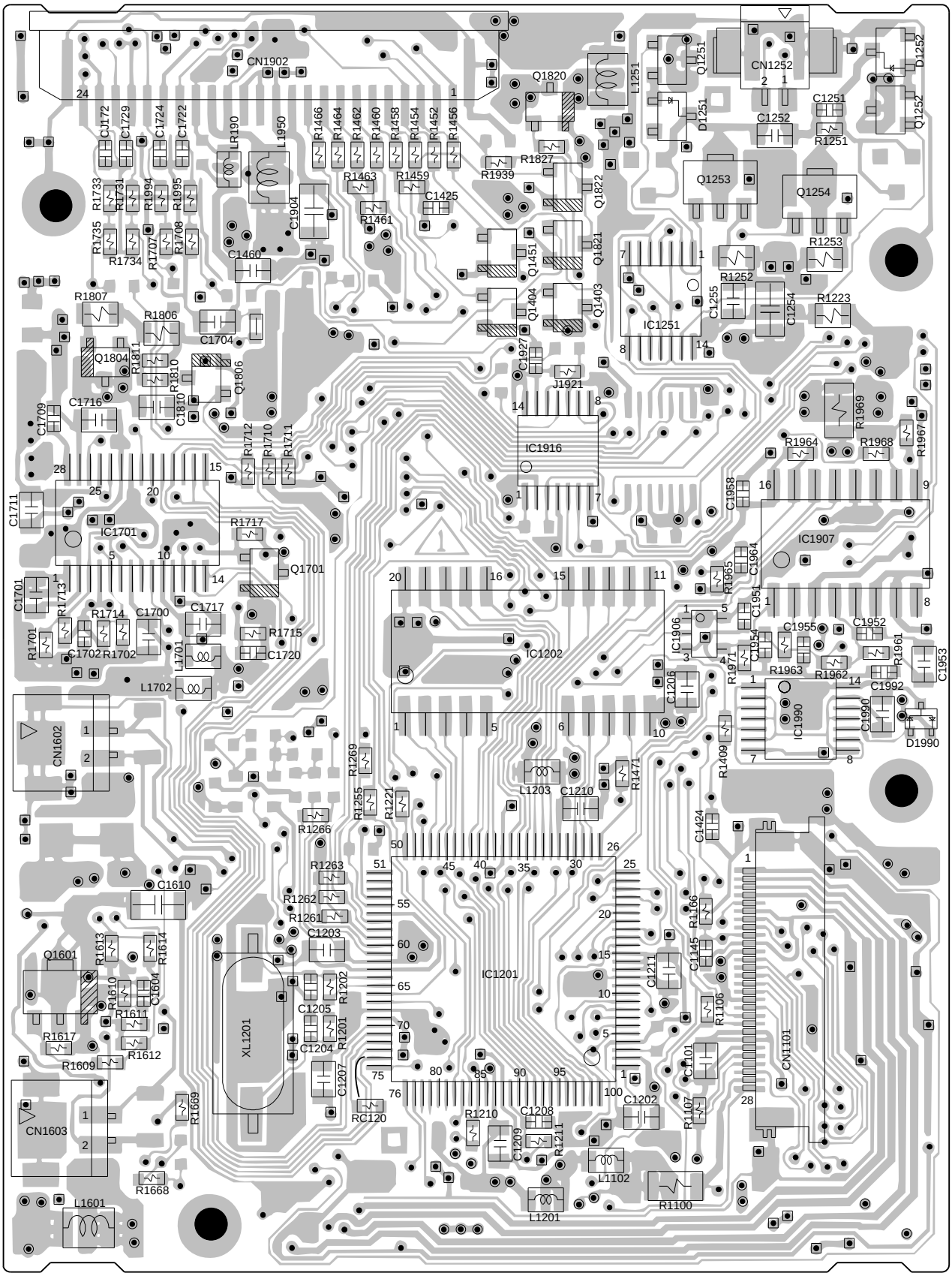

MD MAIN PWB – A (FRONT)

Refer to the schematic diagram for the value of resistors and capacitors.

PC BOARD(Component side view)

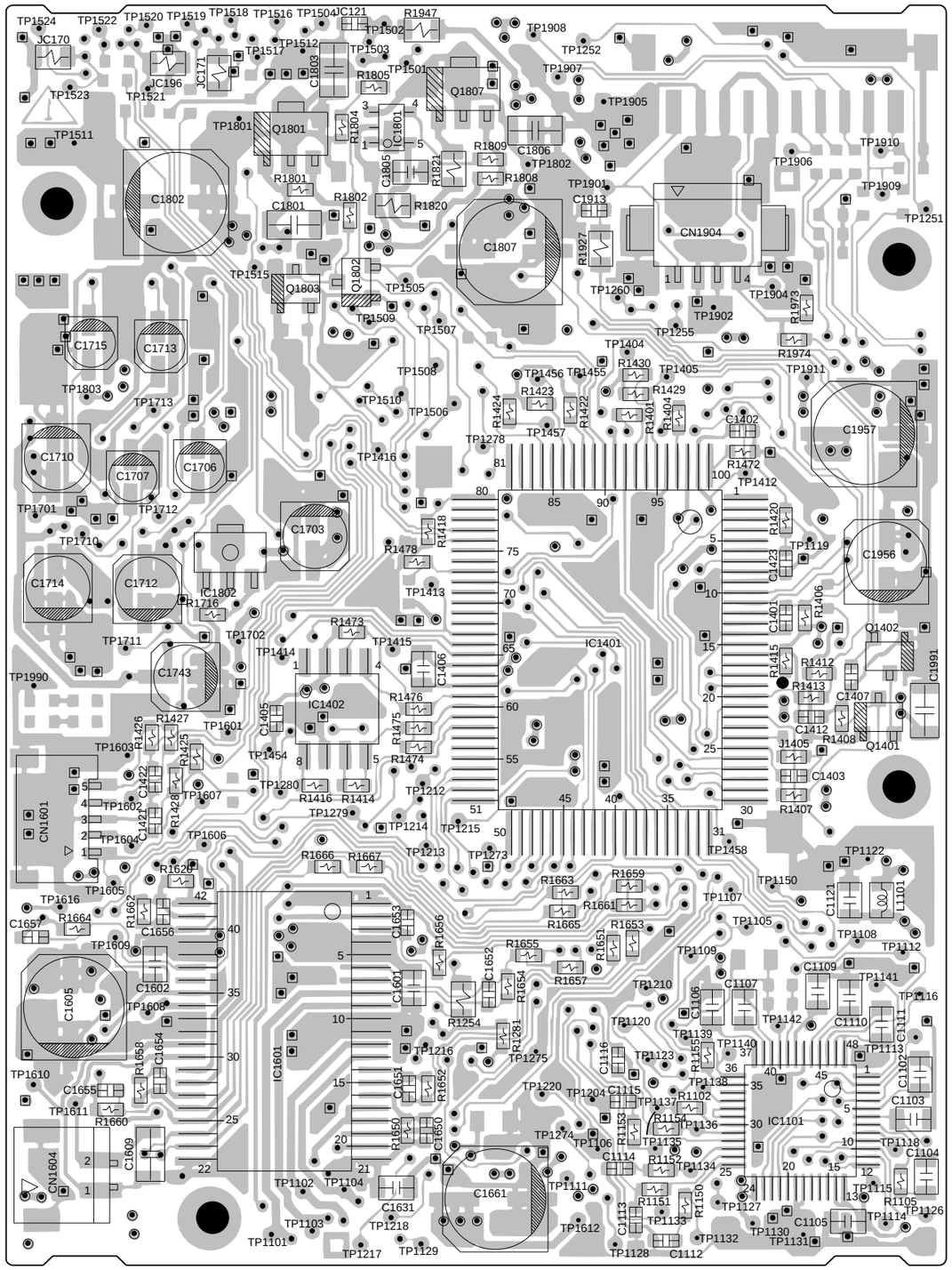

MD MAIN PWB – A (REAR)

Refer to the schematic diagram for the value of resistors and capacitors.

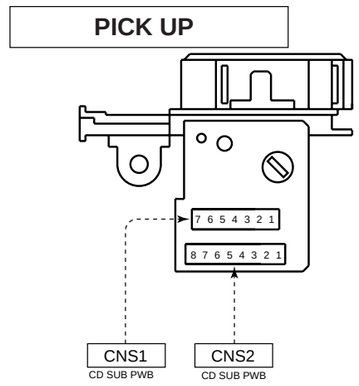

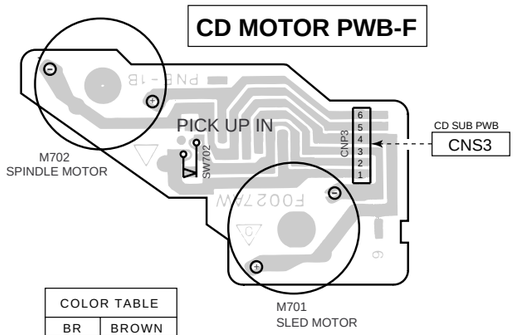

COLOR TABLE	
BR	BROWN
RD(R)	RED
OR	ORANGE
YL	YELLOW
GR	GREEN
BL	BLUE
VL	VIOLET
GY	GREY
WH(W)	WHITE
BK	BLACK
PK	PINK

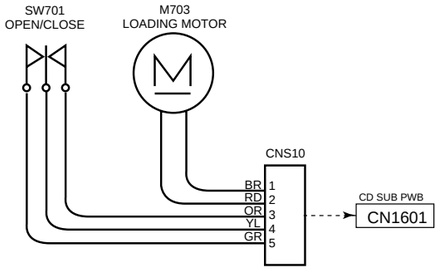

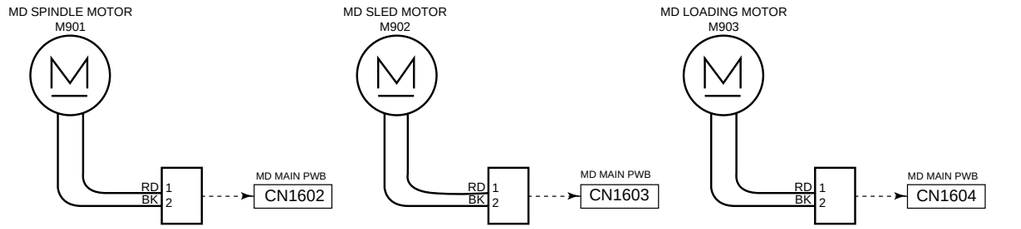

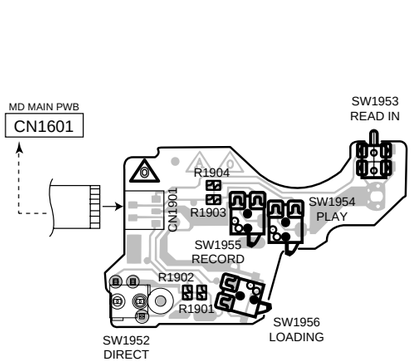

MD MECHANISM SWITCH PWB-G

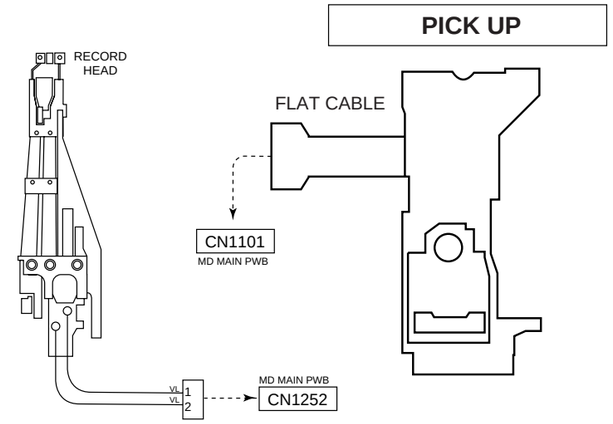

PC BOARD(Component side view)

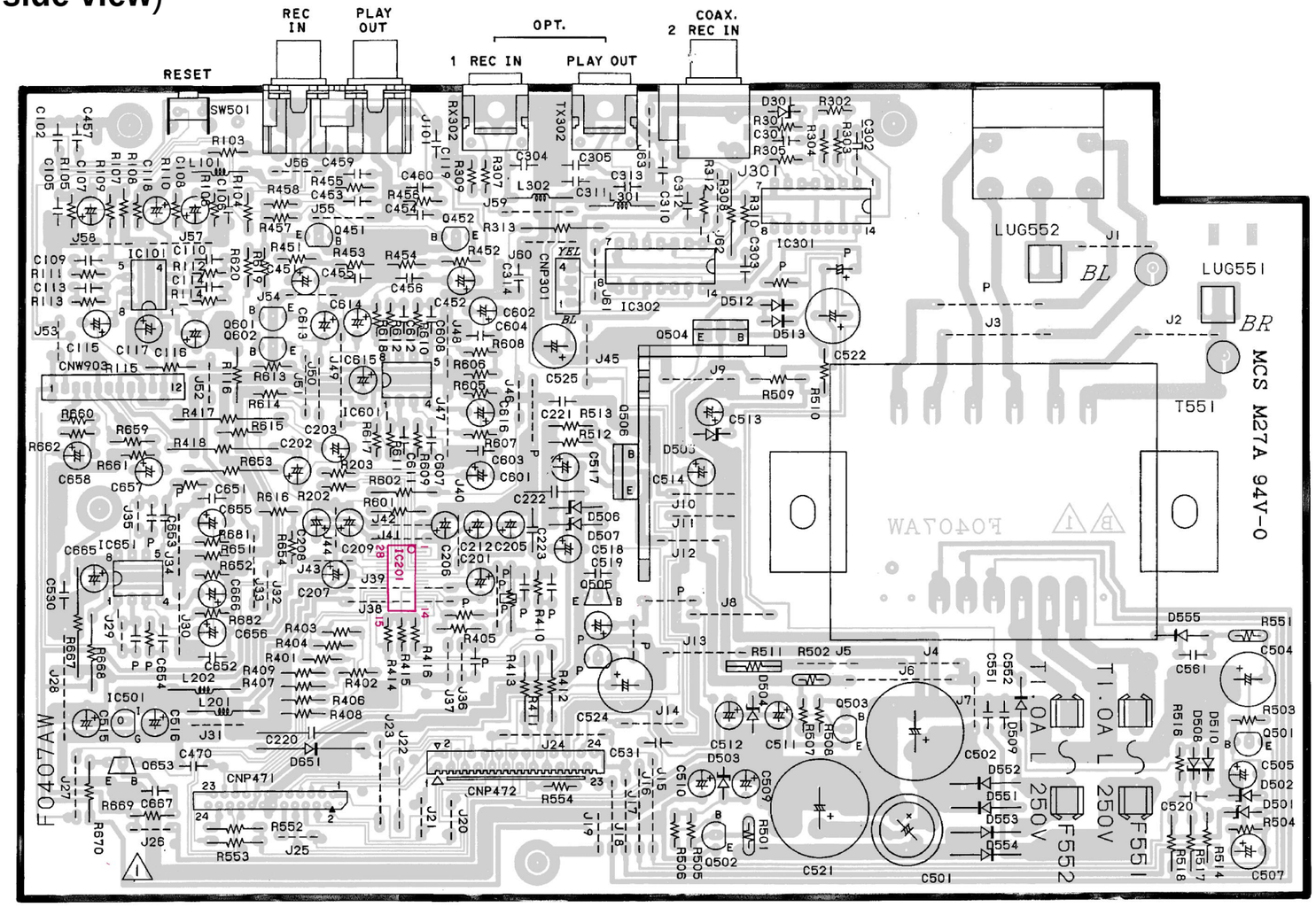

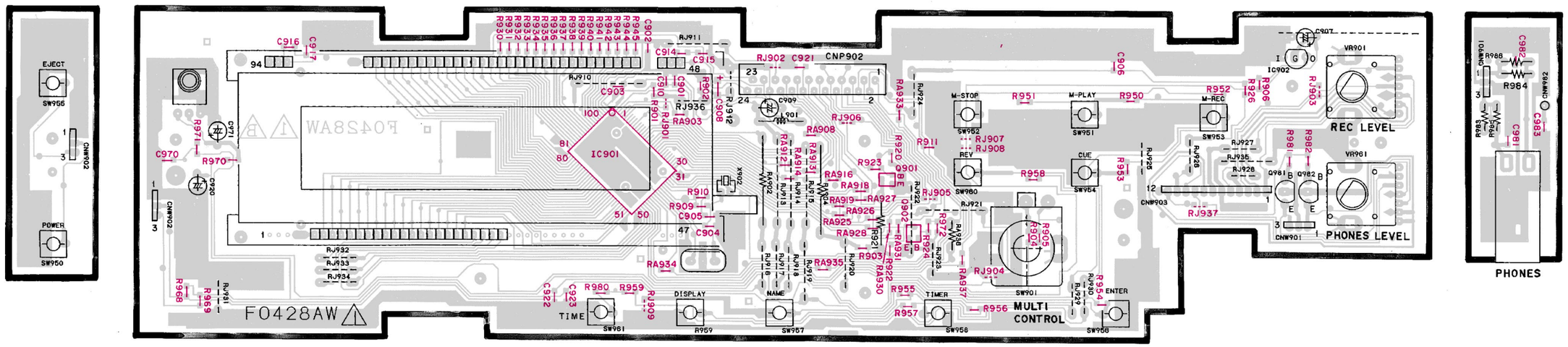

Refer to the schematic diagram for the value of resistors and capacitors.

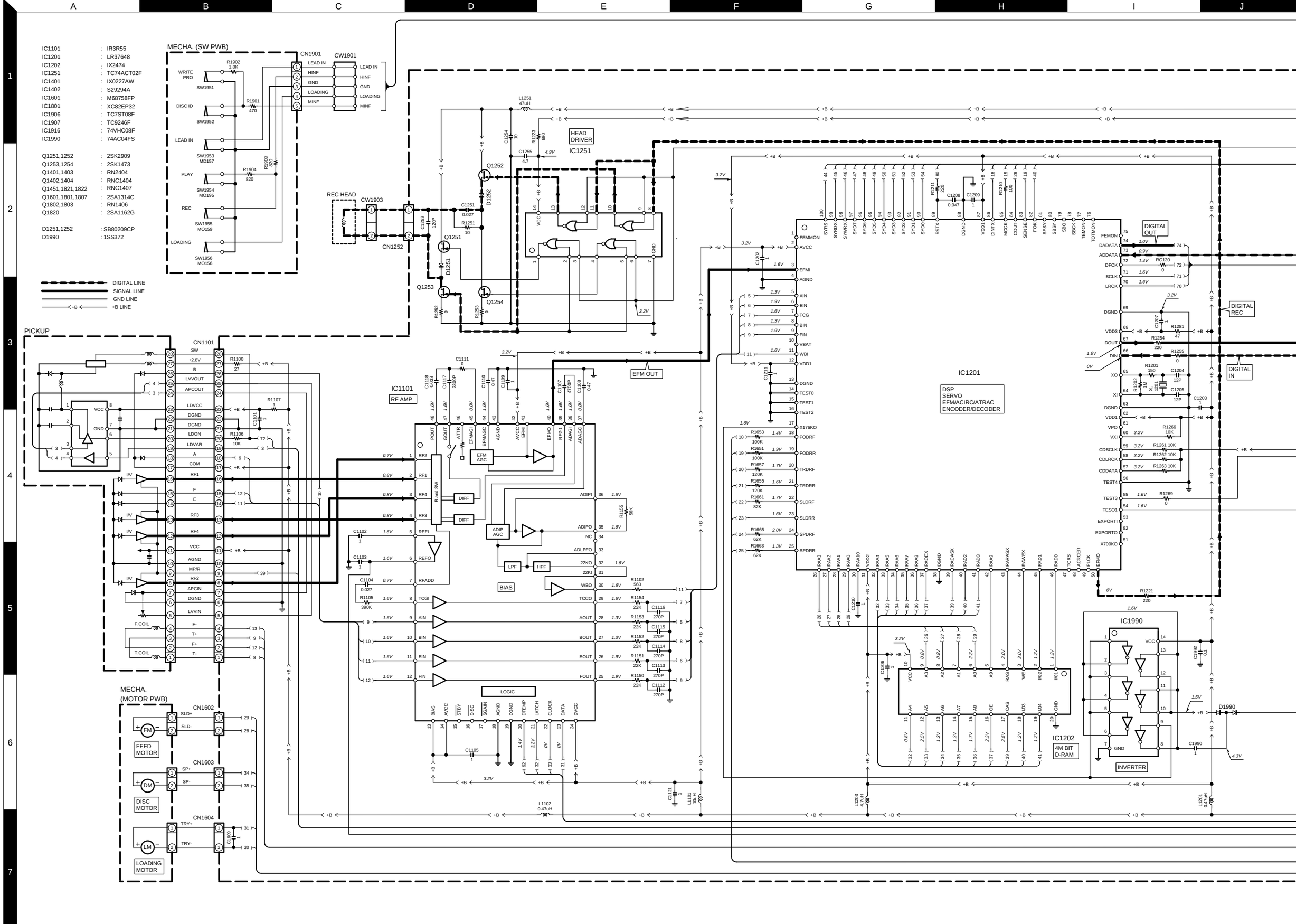

IC1101 : IR3R55
IC1201 : LR37648
IC1202 : IX2474
IC1251 : TC74ACT02F
IC1401 : IX0227AW
IC1402 : S29294A
IC1601 : M68758FP
IC1801 : XC82EP32
IC1906 : TC7ST08F
IC1907 : TC9246F
IC1916 : 74VHC08F
IC1990 : 74AC04FS
Q1251,1252 : 2SK2909
Q1253,1254 : 2SK1473
Q1401,1403 : RN2404
Q1402,1404 : RNC1404
Q1451,1821,1822 : RNC1407
Q1601,1801,1807 : 2SA1314C
Q1802,1803 : RN1406
Q1820 : 2SA1162G
D1251,1252 : SB80209CP
D1990 : 1SS372
DIGITAL LINE
SIGNAL LINE
GND LINE
+B LINE
MECHA. (SW PWB)
CN1901
CW1901
LEAD IN
HINF
GND
LOADING
MINF
WRITE PRO
DISC ID
LEAD IN
PLAY
REC
LOADING
SW1951
SW1952
SW1953 MD157
SW1954 MO195
SW1955 MO159
SW1956 MO156
REC HEAD
CW1903
CN1252
HEAD DRIVER
IC1251
PICKUP
CN1101
IC1101
RF AMP
EFM OUT
EFM AGC
ADIP AGC
DIFF
R and SW
BIAS
LPF
HPF
LOGIC
IC1201
DSP
SERVO
EFM/ACIRC/ATRAC
ENCODER/DECODER
DIGITAL OUT
DIGITAL REC
DIGITAL IN
IC1990
INVERTER
IC1202
4M BIT D-RAM
MECHA. (MOTOR PWB)
CN1602
CN1603
CN1604
FEED MOTOR
DISC MOTOR
LOADING MOTOR

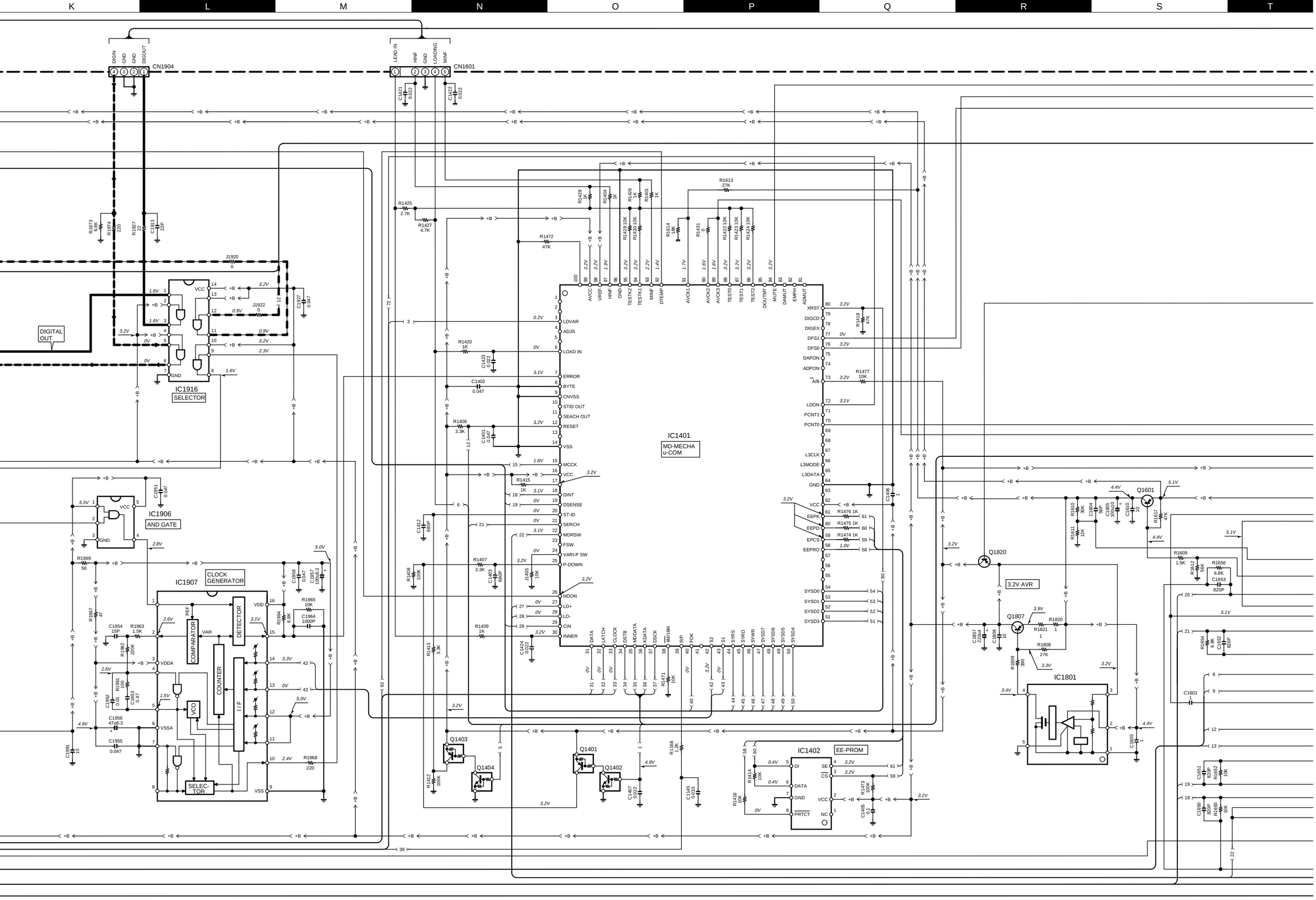

K
L
M
N
O
P
Q
R
S
T
CN1904
CN1601
DIGIN
GND
GND
DIGOUT
LEAD IN
HINF
GND
LOADING
MINF
DIGITAL OUT
IC1916
SELECTOR
IC1906
AND GATE
IC1907
CLOCK GENERATOR
COMPARATOR
DETECTOR
COUNTER
I/F
VCO
SELEC-TOR
IC1401
MD-MECHA u-COM
IC1402
EE-PROM
IC1801
3.2V AVR
Q1601
Q1820
Q1807
Q1401
Q1402
Q1403
Q1404

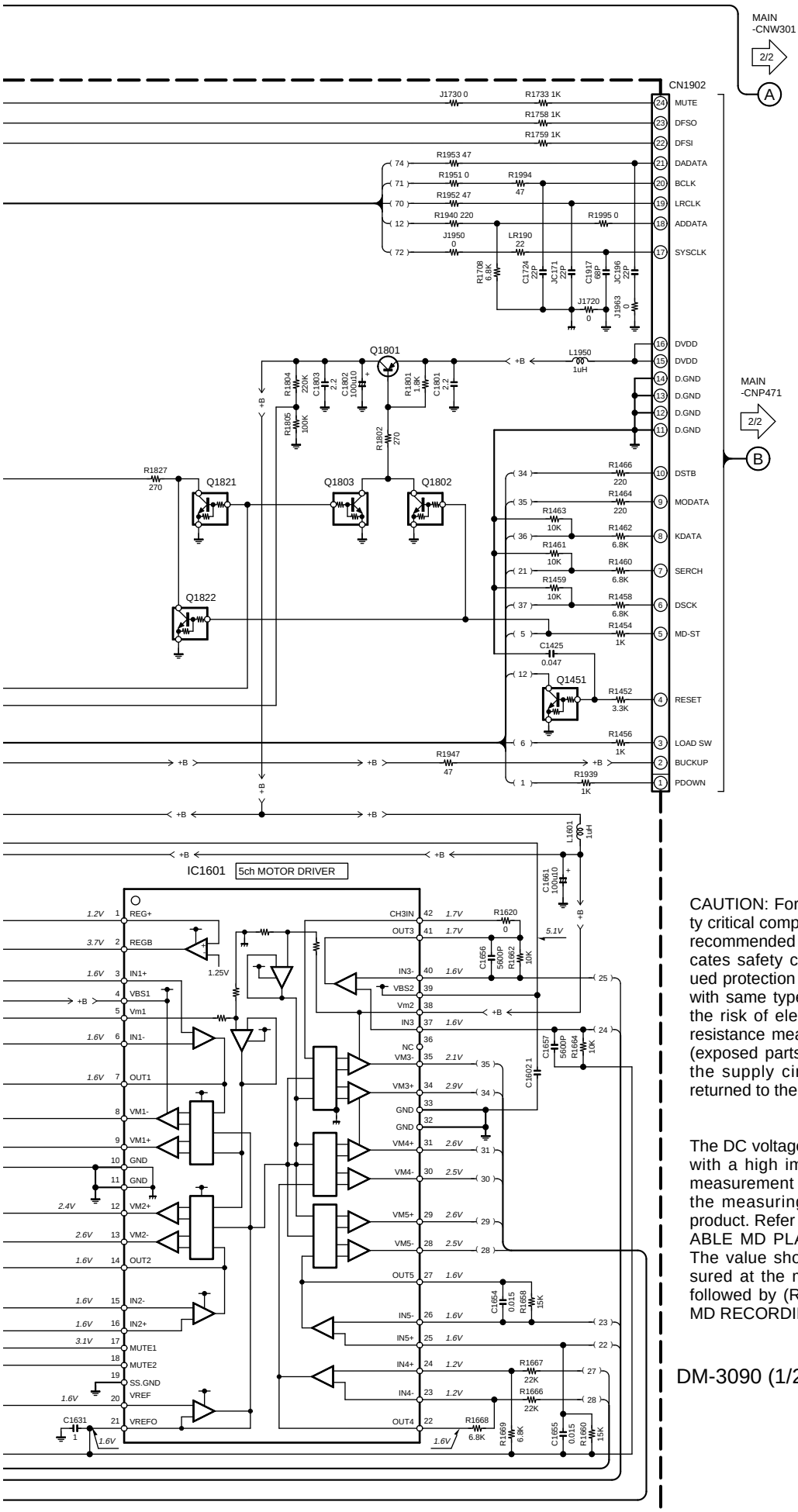

CAUTION: For continued safety, replace safety critical components only with manufacturer's recommended parts (refer to parts list). ⚠ indicates safety critical components. For continued protection against risk of fire, replace only with same type and rating fuse(s). To reduce the risk of electric shock, leakage-current or resistance measurements shall be carried out (exposed parts are acceptably insulated from the supply circuit) before the appliance is returned to the customer.

The DC voltage is an actual reading measured with a high impedance type voltmeter. The measurement value may vary depending on the measuring instruments used or on the product. Refer to the voltage during RECORDABLE MD PLAY unless otherwise specified; The value shown in ( ) is the voltage measured at the moment of STOP. The voltage followed by (REC) refers to the value during MD RECORDING.

DM-3090 (1/2)

DM-3090

KENWOOD

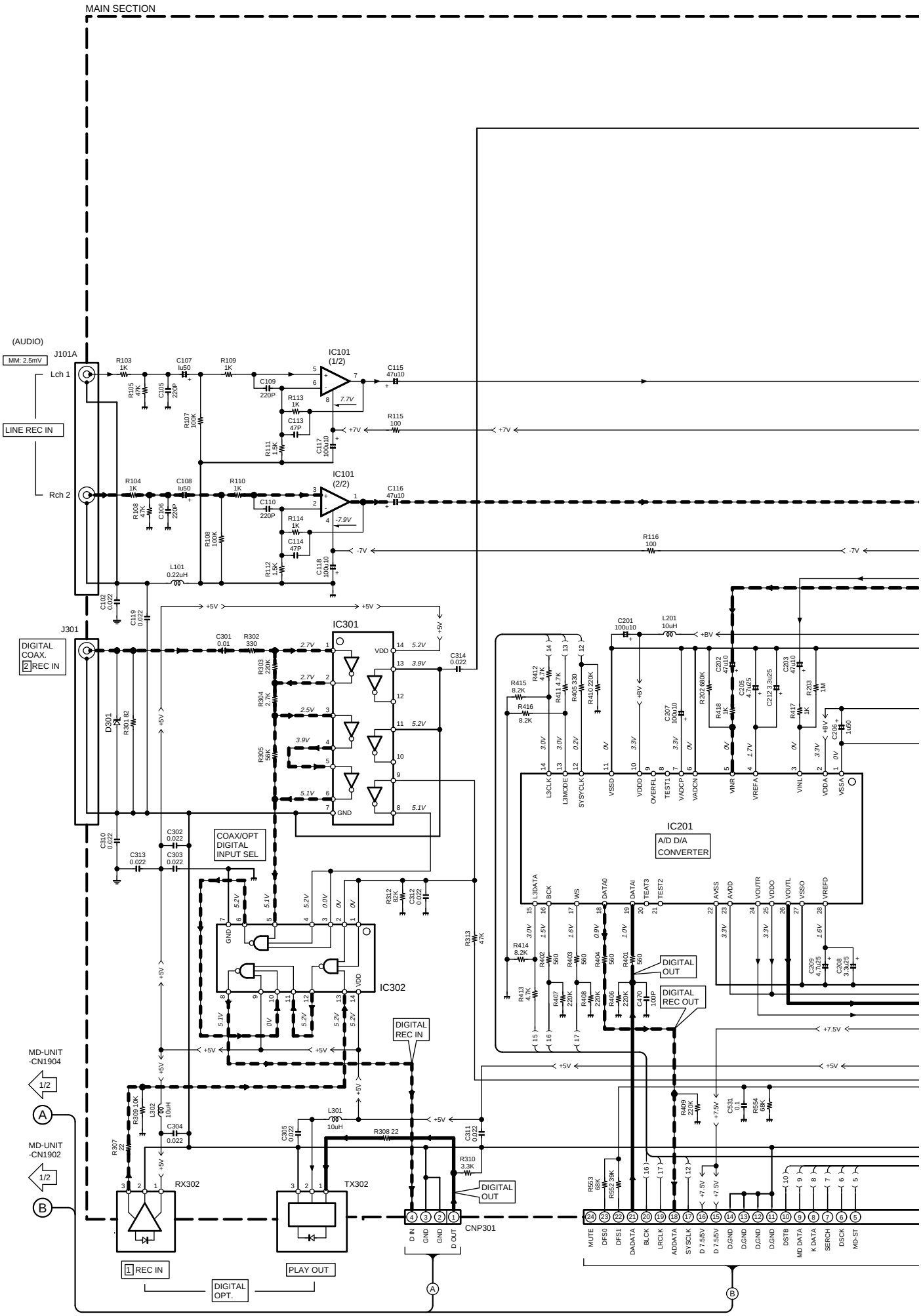
MAIN SECTION
(AUDIO)
MM: 2.5mV
J101A
Lch 1
Rch 2
LINE REC IN
IC101 (1/2)
IC101 (2/2)
J301
DIGITAL COAX. 2 REC IN
IC301
D301
COAX/OPT DIGITAL INPUT SEL
IC302
IC201
A/D D/A CONVERTER
DIGITAL OUT
DIGITAL REC OUT
DIGITAL REC IN
MD-UNIT -CN1904
MD-UNIT -CN1902
RX302
TX302
1 REC IN
PLAY OUT
DIGITAL OPT.
CNP301
D IN
GND
GND
D OUT
MUTE
DFS0
DFS1
DADATA
BLCK
LRCLK
ADDATA
SYSCLK
D 7.5/5V
D.GND
MD DATA
K.DATA
SERCH
DSCK
MD-ST
+5V
+7V
-7V
+7.5V
+8V

MAIN SECTION

IC101,651	: NJM45600
IC201	: uUDA1340
IC301	: 74HCU04
IC302	: 74HC10AP
IC501	: ISB1233SOYX
IC601	: NJM45800
Q451,452,601,602	: 2SC28788
Q501	: KTA1266GR
Q502	: 2SB582-C
Q503	: 2SD488-C
Q504,506	: 2SD2012Y(FIN)
Q505	: KRC1024M
Q653	: KRC102M
D301	: MTZJ5R18
D501	: MTZJ6R88
D502	: MTZJ3308
D503	: MTZ9R18
D504	: MTZ9R19
D505	: MTZ6R8A
D506	: MTZJ7R58
D507	: MTZJ5R8C
D508	: MTZJ2700
D509,510,512,513	: ISS133
D551-555	: RL104A
D651	: SR19

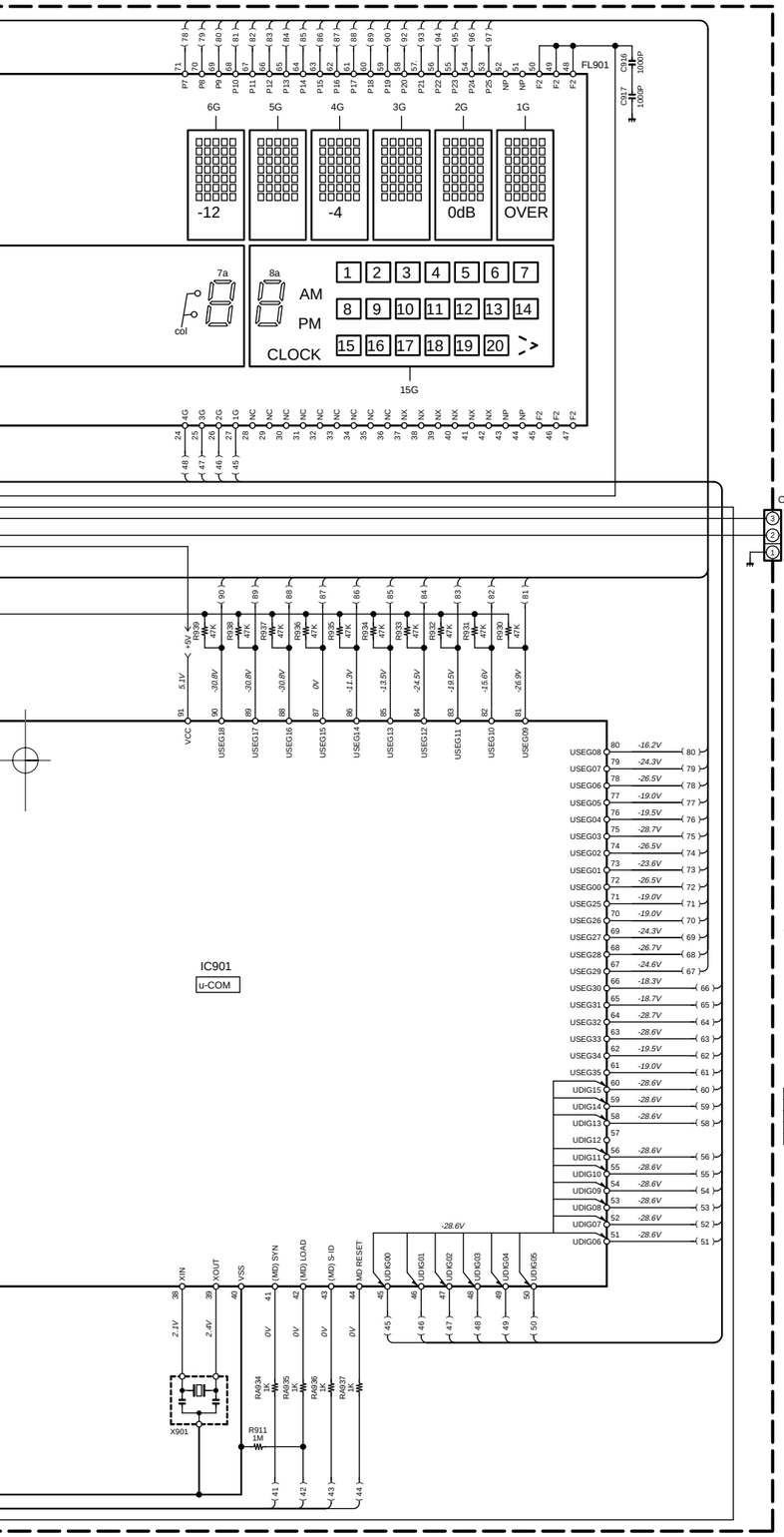

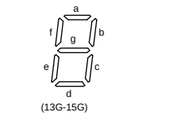

(13G-15G)

1-1 P1	2-1 P2	3-1 P3	4-1 P4	5-1 P5
1-2 P6	2-2 P7	3-2 P8	4-2 P9	5-2 P10
1-3 P11	2-3 P12	3-3 P13	4-3 P14	5-3 P15
1-4 P16	2-4 P17	3-4 P18	4-4 P19	5-4 P20
1-5 P21	2-5 P22	3-5 P23	4-5 P24	5-5 P25
1-6 P26	2-6 P27	3-6 P28	4-6 P29	5-6 P30
1-7 P31	2-7 P32	3-7 P33	4-7 P34	5-7 P35

(1G-12G)

DISPLAY SECTION

IC901	:	IX0196AWZZ
IC902	:	PST9127
Q901,902	:	2SC2412KR
UN970	:	HL21043TH2
FL901	:	15-BT-37G

DESTINATION		R902
COUNTRY	ABB.	
JAPAN	J	12K
U.K.	T	3.9K
EUROPE	E	

ANODE CONNECTION

	15G	14G	13G	12G	11G	10G	9G	8G	7G	6G	5G	4G	3G	2G	1G
P1	—	—	—	1-1	1-1	1-1	1-1	1-1	1-1	1-1	1-1	1-1	1-1	1-1	1-1
P2	—	—	—	2-1	2-1	2-1	2-1	2-1	2-1	2-1	2-1	2-1	2-1	2-1	2-1
P3	—	—	—	3-1	3-1	3-1	3-1	3-1	3-1	3-1	3-1	3-1	3-1	3-1	3-1
P4	—	—	—	4-1	4-1	4-1	4-1	4-1	4-1	4-1	4-1	4-1	4-1	4-1	4-1
P5	>	—	—	5-1	5-1	5-1	5-1	5-1	5-1	5-1	5-1	5-1	5-1	5-1	5-1
P6	20	RANDOM	↩	1-2	1-2	1-2	1-2	1-2	1-2	1-2	1-2	1-2	1-2	1-2	1-2
P7	19	REC	PRGM	2-2	2-2	2-2	2-2	2-2	2-2	2-2	2-2	2-2	2-2	2-2	2-2
P8	18	TIMER	▷	3-2	3-2	3-2	3-2	3-2	3-2	3-2	3-2	3-2	3-2	3-2	3-2
P9	CLOCK	7d	3d	4-2	4-2	4-2	4-2	4-2	4-2	4-2	4-2	4-2	4-2	4-2	4-2
P10	—	—	—	5-2	5-2	5-2	5-2	5-2	5-2	5-2	5-2	5-2	5-2	5-2	5-2
P11	8d	6d	2d	1-3	1-3	1-3	1-3	1-3	1-3	1-3	1-3	1-3	1-3	1-3	1-3
P12	17	5d	1d	2-3	2-3	2-3	2-3	2-3	2-3	2-3	2-3	2-3	2-3	2-3	2-3
P13	16	7c	3c	3-3	3-3	3-3	3-3	3-3	3-3	3-3	3-3	3-3	3-3	3-3	3-3
P14	15	7e	3e	4-3	4-3	4-3	4-3	4-3	4-3	4-3	4-3	4-3	4-3	4-3	4-3
P15	14	col(down)	—	5-3	5-3	5-3	5-3	5-3	5-3	5-3	5-3	5-3	5-3	5-3	5-3
P16	8c	6c	2c	1-4	1-4	1-4	1-4	1-4	1-4	1-4	1-4	1-4	1-4	1-4	1-4
P17	8e	6e	2e	2-4	2-4	2-4	2-4	2-4	2-4	2-4	2-4	2-4	2-4	2-4	2-4
P18	13	5c	1c	3-4	3-4	3-4	3-4	3-4	3-4	3-4	3-4	3-4	3-4	3-4	3-4
P19	12	5e	1e	4-4	4-4	4-4	4-4	4-4	4-4	4-4	4-4	4-4	4-4	4-4	4-4
P20	11	4c	MONO LP	5-4	5-4	5-4	5-4	5-4	5-4	5-4	5-4	5-4	5-4	5-4	5-4
P21	10	REMAIN	—	1-5	1-5	1-5	1-5	1-5	1-5	1-5	1-5	1-5	1-5	1-5	1-5
P22	9	7g	3g	2-5	2-5	2-5	2-5	2-5	2-5	2-5	2-5	2-5	2-5	2-5	2-5
P23	8g	6g	2g	3-5	3-5	3-5	3-5	3-5	3-5	3-5	3-5	3-5	3-5	3-5	3-5
P24	8	5g	1g	4-5	4-5	4-5	4-5	4-5	4-5	4-5	4-5	4-5	4-5	4-5	4-5
P25	7	7b	3b	5-5	5-5	5-5	5-5	5-5	5-5	5-5	5-5	5-5	5-5	5-5	5-5
P26	PM	7f	3f	1-6	1-6	1-6	1-6	1-6	1-6	1-6	1-6	1-6	1-6	1-6	1-6
P27	AM	col(up)	—	2-6	2-6	2-6	2-6	2-6	2-6	2-6	2-6	2-6	2-6	2-6	2-6
P28	8b	6b	2b	3-6	3-6	3-6	3-6	3-6	3-6	3-6	3-6	3-6	3-6	3-6	3-6
P29	8f	6f	2f	4-6	4-6	4-6	4-6	4-6	4-6	4-6	4-6	4-6	4-6	4-6	4-6
P30	6	5b	1b	5-6	5-6	5-6	5-6	5-6	5-6	5-6	5-6	5-6	5-6	5-6	5-6
P31	5	5f	1f	1-7	1-7	1-7	1-7	1-7	1-7	1-7	1-7	1-7	1-7	1-7	1-7
P32	4	4b	▯▯	2-7	2-7	2-7	2-7	2-7	2-7	2-7	2-7	2-7	2-7	2-7	2-7
P33	3	TOTAL	◯	3-7	3-7	3-7	3-7	3-7	3-7	3-7	3-7	3-7	3-7	3-7	3-7
P34	2	7a	3a	4-7	4-7	4-7	4-7	4-7	4-7	4-7	4-7	4-7	4-7	4-7	4-7
P35	8a	6a	2a	5-7	5-7	5-7	5-7	5-7	5-7	5-7	5-7	5-7	5-7	5-7	5-7
P36	1	5a	1a	▫▫	−∞	TOC	DISC	TRACK	DATE	-12	—	-4	—	0dB	OVER

2SB562
2SC2878
2SD468

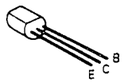

RN1406
RN2404

NJM4580D

NJM4560D
NJM4565D

TC9246F

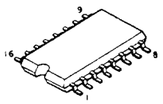

2SD2012

PST9127NR

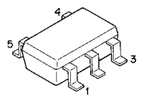

CAUTION: For continued safety, replace safety critical components only with manufacturer's recommended parts (refer to parts list). ⚠ indicates safety critical components. For continued protection against risk of fire, replace only with same type and rating fuse(s). To reduce the risk of electric shock, leakage-current or resistance measurements shall be carried out (exposed parts are acceptably insulated from the supply circuit) before the appliance is returned to the customer.

The DC voltage is an actual reading measured with a high impedance type voltmeter. The measurement value may vary depending on the measuring instruments used or on the product. Refer to the voltage during RECORDABLE MD PLAY unless otherwise specified; The value shown in ( ) is the voltage measured at the moment of STOP. The voltage followed by (REC) refers to the value during MD RECORDING.

DM-3090 (2/2)

Y22-7510-00

DM-3090

KENWOOD

EXPLODED VIEW (MECHANISM)

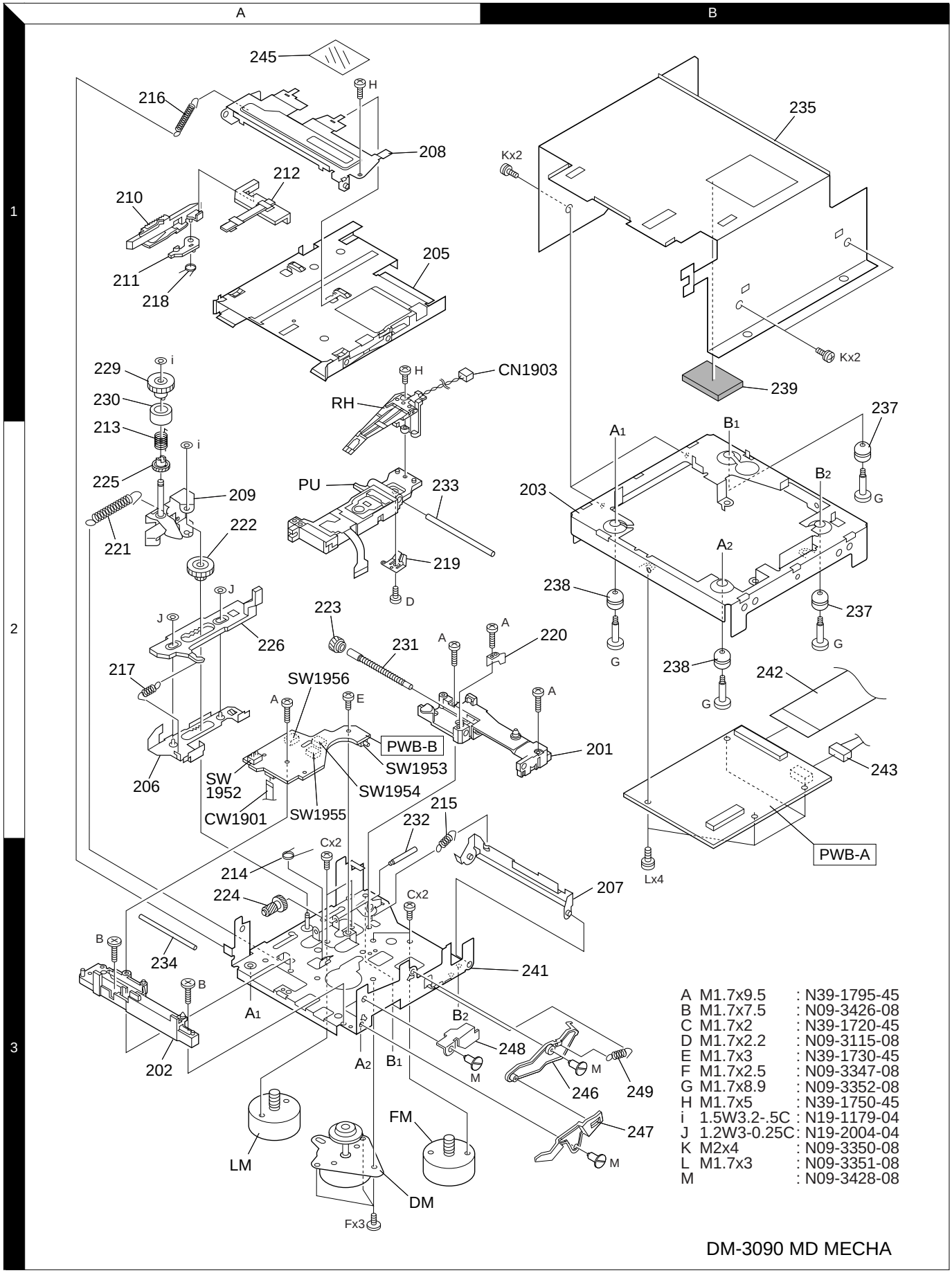

A	M1.7x9.5	: N39-1795-45
B	M1.7x7.5	: N09-3426-08
C	M1.7x2	: N39-1720-45
D	M1.7x2.2	: N09-3115-08
E	M1.7x3	: N39-1730-45
F	M1.7x2.5	: N09-3347-08
G	M1.7x8.9	: N09-3352-08
H	M1.7x5	: N39-1750-45
i	1.5W3.2-.5C	: N19-1179-04
J	1.2W3-0.25C	: N19-2004-04
K	M2x4	: N09-3350-08
L	M1.7x3	: N09-3351-08
M		: N09-3428-08

DM-3090 MD MECHA

Parts with exploded view numbers larger than 700 are not supplied.

EXPLODED VIEW (UNIT)

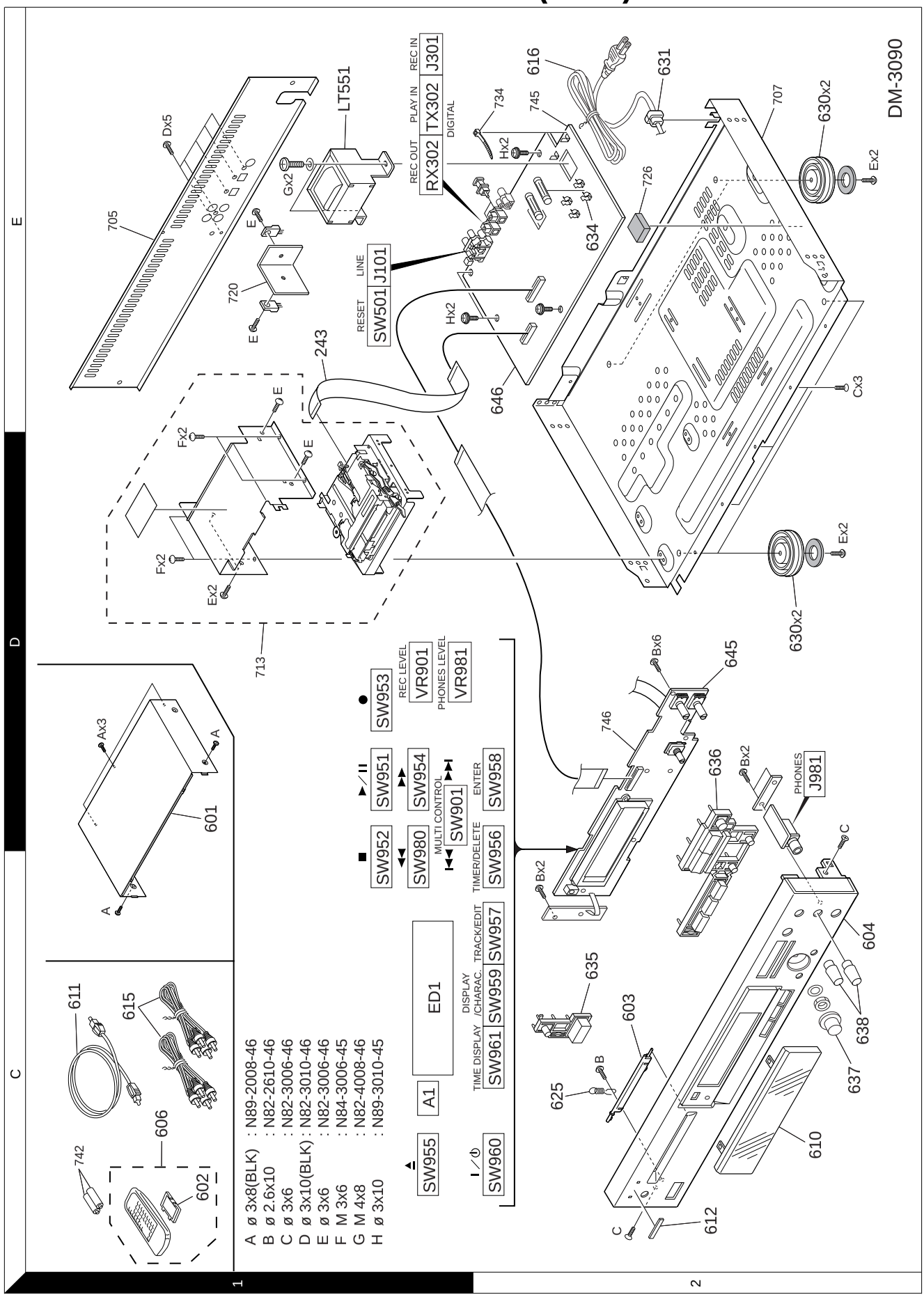

Parts with exploded numbers larger than 700 are not supplied.

✻ New Parts
Parts without **Parts No.** are not supplied.
Les articles non mentionnes dans le **Parts No.** ne sont pas fournis.
Teile ohne **Parts No.** werden nicht geliefert.

❶

Ref. No	Address	New Parts	Parts No.	Description	Destination	Remarks
DM-3090						
601	1D	✻	A01-3562-08	METALLIC CABINET		
602	1C		A09-0337-08	BATTERY COVER		
603	2C	✻	A29-0898-08	PANEL		
604	2C	✻	A60-1370-08	FRONT PANEL		
606	1C	✻	A70-1208-08	REMOTE CONTROL ASSY		
610	2C	✻	B10-2457-08	FRONT GLASS		
611	1C		B19-1529-05	OPTICAL FIBER		
612	2C		B43-0302-04	KENWOOD BADGE		
-		✻	B60-3574-08	INSTRUCTION MANUAL	T	
-		✻	B60-3575-08	INSTRUCTION MANUAL	E	
615	1C		E30-0505-05	AUDIO CORD		
⚠ 616	2E		E30-2579-05	AC POWER CORD	E	
⚠ 616	2E		E30-2718-05	AC POWER CORD	T	
625	2C	✻	G01-4048-08	SPRING		
-		✻	H10-7415-08	POLYSTYRENE FORMED FIXTURE		
-		✻	H13-0291-08	PACKING FIXTURE	T	
-		✻	H13-0292-08	CARTON BOARD		
-		✻	H13-0293-08	CARTON BOARD		
-		✻	H20-0601-08	PROTECTION BAG		
-		✻	H50-2695-08	ITEM CARTON CASE	E	
-		✻	H50-2697-08	ITEM CARTON CASE	T	
630	2D,2E	✻	J02-1410-08	INSULATOR		
⚠ 631	2E	✻	J42-0338-08	POWER CORD BUSHING		
634	2E		J13-0075-05	FUSE HOLDER		
635	2C	✻	K27-2261-08	KNOB (POWER)		
636	2D	✻	K27-2262-08	KNOB		
637	1C	✻	K29-6946-08	KNOB (JOG)		
638	1C	✻	K29-6947-08	KNOB (REC/HP)		
ELECTRIC UNIT						
C102			CK45FF1H223Z	CERAMIC 0.022UF Z		
C105,106			CK45FB1H221K	CERAMIC 220PF K		
C107,108			CE04KW1H010M	ELECTRO 1.0UF 50WV		
C109,110			CK45FB1H221K	CERAMIC 220PF K		
C113,114			CC45FSL1H470J	CERAMIC 47PF J		
C115,116			CE04KW1A470M	ELECTRO 47UF 10WV		
C117,118			CE04KW1A101M	ELECTRO 100UF 10WV		
C119			CK45FF1H223Z	CERAMIC 0.022UF Z		
C201			CE04KW1A101M	ELECTRO 100UF 10WV		
C202,203			CE04KW1A470M	ELECTRO 47UF 10WV		
C205			CE04KW1E4R7M	ELECTRO 4.7UF 25WV		
C206			CE04KW1H010M	ELECTRO 1.0UF 50WV		
C207			CE04KW1A101M	ELECTRO 100UF 10WV		
C208			C90-3231-05	ELECTRO 3.3UF 25WV		
C209			CE04KW1E4R7M	ELECTRO 4.7UF 25WV		
C212			C90-3231-05	ELECTRO 3.3UF 25WV		
C220			CK45FB1H102K	CERAMIC 1000PF K		
C221			CK45FF1H223Z	CERAMIC 0.022UF Z		
C222,223			CK45FF1H223Z	CERAMIC 0.022UF Z		
C301			CK45FF1H103Z	CERAMIC 0.010UF Z		
C302-305			CK45FF1H223Z	CERAMIC 0.022UF Z		
C310-314			CK45FF1H223Z	CERAMIC 0.022UF Z		

L : Scandinavia **K :** USA **P :** Canada **R :** Mexico
Y : PX(Far East, Hawaii) **T :** Europe **E :** Europe **G :** Germany
Y : AAFES(Europe) **X :** Australia **M :** Other Areas

⚠ indicates safety critical components.

✻ New Parts
Parts without **Parts No.** are not supplied.
Les articles non mentionnes dans le **Parts No.** ne sont pas fournis.
Teile ohne **Parts No.** werden nicht geliefert.

❷

Ref. No	Address	New Parts	Parts No.	Description	Destination	Remarks
C315			CK45FB1H103K	CERAMIC 0.010UF K		
C451,452			CE04KW1A470M	ELECTRO 47UF 10WV		
C453,454			CK45FB1H471K	CERAMIC 470PF K		
C455,456			CK45FB1H821K	CERAMIC 820PF K		
C457			CK45FF1H223Z	CERAMIC 0.022UF Z		
C459,460			CK45FB1H471K	CERAMIC 470PF K		
C461			CK45FB1H103K	CERAMIC 0.010UF K		
C470			CK45FB1H101K	CERAMIC 100PF K		
C501			CE04KW1E102M	ELECTRO 1000UF 25WV		
C502			CE04KW1E472M	ELECTRO 4700UF 25WV		
C504			CE04KW1H221M	ELECTRO 220UF 50WV		
C505			CE04KW1H100M	ELECTRO 10UF 50WV		
C507			CE04KW1H330M	ELECTRO 33UF 50WV		
C509			CE04KW1E470M	ELECTRO 47UF 25WV		
C510			CE04KW1H010M	ELECTRO 1.0UF 50WV		
C511			CE04KW1E470M	ELECTRO 47UF 25WV		
C512			CE04KW1H010M	ELECTRO 1.0UF 50WV		
C513			CE04KW1E470M	ELECTRO 47UF 25WV		
C514-516			CE04KW1C100M	ELECTRO 10UF 16WV		
C517,518			CE04KW1A101M	ELECTRO 100UF 10WV		
C519			CK45FF1H223Z	CERAMIC 0.022UF Z		
C520			CK45FB1H102K	CERAMIC 1000PF K		
C521			CE04KW1E472M	ELECTRO 4700UF 25WV		
C522			CE04KW0J102M	ELECTRO 1000UF 6.3WV		
C524			CE04KW0J102M	ELECTRO 1000UF 6.3WV		
C525			CE04KW1A101M	ELECTRO 100UF 10WV		
C530			CK45FF1H223Z	CERAMIC 0.022UF Z		
C531			CF92FV1H104J	MF-C 0.10UF J		
C551,552			CK45FF1H103Z	CERAMIC 0.010UF Z		
C561			CK45FF1H103Z	CERAMIC 0.010UF Z		
C601,602			CE04KW1A470M	ELECTRO 47UF 10WV		
C603,604			CK45FB1H221K	CERAMIC 220PF K		
C607,608			CK45FB1H221K	CERAMIC 220PF K		
C611,612			C91-0737-05	CERAMIC 47PF J		
C613,614			CE04KW1A470M	ELECTRO 47UF 10WV		
C615,616			CE04KW1A101M	ELECTRO 100UF 10WV		
C651,652			CK45FB1H151K	CERAMIC 150PF K		
C653,654			C91-0731-05	CERAMIC 27PF J		
C655,656			CE04KW1C100M	ELECTRO 10UF 16WV		
C657,658			CE04KW1A221M	ELECTRO 220UF 10WV		
C665,666			CE04KW1A101M	ELECTRO 100UF 10WV		
C667			CF92FV1H104J	MF-C 0.10UF J		
C901-903			CK73FB1H104Z	CHIP C 0.10UF Z		
C904			CC73FCH1H680J	CHIP C 68PF J		
C905			CC73FCH1H120J	CHIP C 12PF J		
C906			CK73FB1H104Z	CHIP C 0.10UF Z		
C907			CE04KW1H1R0M	ELECTRO 1.0UF 50WV		
C908			CK73EF1E105Z	CHIP C 1.0UF Z		
C909			CE04KW1H1R0M	ELECTRO 1.0UF 50WV		
C910			CK73FB1H104Z	CHIP C 0.10UF Z		
C914-917			CK73FB1H102K	CHIP C 1000PF K		
C920			CE04KW1C100M	ELECTRO 10UF 16WV		
C922,923			CK73FB1H103Z	CHIP C 0.010UF Z		
C970			CK73FB1H101K	CHIP C 100PF K		
C971			CE04KW1C100M	ELECTRO 10UF 16WV		

L : Scandinavia **K :** USA **P :** Canada **R :** Mexico
Y : PX(Far East, Hawaii) **T :** Europe **E :** Europe **G :** Germany
Y : AAFES(Europe) **X :** Australia **M :** Other Areas

⚠ indicates safety critical components.

✻ New Parts
Parts without **Parts No.** are not supplied.
Les articles non mentionnes dans le **Parts No.** ne sont pas fournis.
Teile ohne **Parts No.** werden nicht geliefert.

❸

Ref. No	Address	New Parts	Parts No.	Description	Destination	Remarks
C981,982			CK73FB1H102K	CHIP C 1000PF K		
C983			CK73FB1E104Z	CHIP C 0.10UF Z		
CNW301		✻	E35-2102-08	CONNECTOR ASSY 4PIN		
CNP471		✻	E40-8226-08	PLUG 24PIN		
CNP472		✻	E40-8227-08	PLUG 24PIN		
CNP473		✻	E40-8262-08	CONNECTOR 12PIN		
CNP902		✻	E40-8263-08	PLUG 24PIN		
CNW901		✻	E35-2143-08	FLAT CABLE 3PIN		
CNW902		✻	E35-2144-08	FLAT CABLE 4PIN		
CNW903		✻	E40-8231-08	CONNECTOR ASSY 12PIN		
J101		✻	E63-1031-08	ANALOGUE OUTPUT TERMINAL		
J301		✻	E63-1032-08	DIGITAL INPUT TERMINAL		
J981			E11-0345-08	HEAD PHONE JACK		
⚠ F551,552		✻	F53-0162-08	FUSE T1A250V		
L101		✻	L90-0304-08	COIL 0.22UH		
L201,202		✻	L90-0305-08	COIL 10UH		
L301,302		✻	L90-0305-08	COIL 10UH		
L901		✻	L90-0306-08	COIL 22UH		
⚠ T551		✻	L07-2543-08	POWER TRANSFORMER		
X901		✻	L77-2227-08	FILTER 4.19MHz		
X902			L77-2168-08	CRYSTAL 32.768kHz		
⚠ R501,502		✻	X1067	POSISTOR 8.2		
⚠ R511		✻	X1066	POSISTOR 8.2		
⚠ R551		✻	X1067	POSISTOR 8.2		
R901			RK73FB2A103J	CHIP R 10K J 1/10W		
R902			RK73FB2A392J	CHIP R 3.9K J 1/10W		
R903			RK73FB2A123J	CHIP R 12K J 1/10W		
R904			RK73FB2A682J	CHIP R 6.8K J 1/10W		
R905			RK73FB2A123J	CHIP R 12K J 1/10W		
R906			RK73FB2A224J	CHIP R 220K J 1/10W		
R909			RK73FB2A182J	CHIP R 1.8K J 1/10W		
R910			RK73FB2A475J	CHIP R 4.7M J 1/10W		
R911			RK73FB2A105J	CHIP R 1.0M J 1/10W		
R920			RK73FB2A474J	CHIP R 470K J 1/10W		
R922-924			RK73FB2A103J	CHIP R 10K J 1/10W		
R926			RK73FB2A102J	CHIP R 1.0K J 1/10W		
R930-645			RK73FB2A473J	CHIP R 47K J 1/10W		
R950			RK73FB2A102J	CHIP R 1.0K J 1/10W		
R951			RK73FB2A122J	CHIP R 1.2K J 1/10W		
R952			RK73FB2A152J	CHIP R 1.5K J 1/10W		
R953			RK73FB2A182J	CHIP R 1.8K J 1/10W		
R954			RK73FB2A102J	CHIP R 1.0K J 1/10W		
R955			RK73FB2A122J	CHIP R 1.2K J 1/10W		
R956			RK73FB2A152J	CHIP R 1.5K J 1/10W		
R957			RK73FB2A182J	CHIP R 1.8K J 1/10W		
R958			RK73FB2A272J	CHIP R 2.7K J 1/10W		
R959			RK73FB2A392J	CHIP R 3.9K J 1/10W		
R960			RK73FB2A562J	CHIP R 5.6K J 1/10W		
R968,969			RK73FB2A103J	CHIP R 10K J 1/10W		
R970			RK73FB2A102J	CHIP R 1.0K J 1/10W		
R971			RK73FB2A101J	CHIP R 100 J 1/10W		
R972			RK73FB2A474J	CHIP R 470K J 1/10W		

L : Scandinavia **K :** USA **P :** Canada **R :** Mexico
Y : PX(Far East, Hawaii) **T :** Europe **E :** Europe **G :** Germany
Y : AAFES(Europe) **X :** Australia **M :** Other Areas

⚠ indicates safety critical components.

✻ New Parts
Parts without **Parts No.** are not supplied.
Les articles non mentionnes dans le **Parts No.** ne sont pas fournis.
Teile ohne **Parts No.** werden nicht geliefert.

❹

Ref. No	Address	New Parts	Parts No.	Description	Destination	Remarks
RA903			RK73FB2A102J	CHIP R 1.0K J 1/10W		
RA908			RK73FB2A102J	CHIP R 1.0K J 1/10W		
RA912			RK73FB2A102J	CHIP R 1.0K J 1/10W		
RA913			RK73FB2A102J	CHIP R 1.0K J 1/10W		
RA914			RK73FB2A102J	CHIP R 1.0K J 1/10W		
RA916			RK73FB2A102J	CHIP R 1.0K J 1/10W		
RA918			RK73FB2A102J	CHIP R 1.0K J 1/10W		
RA919			RK73FB2A102J	CHIP R 1.0K J 1/10W		
RA925			RK73FB2A102J	CHIP R 1.0K J 1/10W		
RA926			RK73FB2A102J	CHIP R 1.0K J 1/10W		
RA927			RK73FB2A102J	CHIP R 1.0K J 1/10W		
RA928			RK73FB2A102J	CHIP R 1.0K J 1/10W		
RA930			RK73FB2A102J	CHIP R 1.0K J 1/10W		
RA931			RK73FB2A102J	CHIP R 1.0K J 1/10W		
RA933			RK73FB2A102J	CHIP R 1.0K J 1/10W		
RA934			RK73FB2A102J	CHIP R 1.0K J 1/10W		
RA935			RK73FB2A102J	CHIP R 1.0K J 1/10W		
RA937			RK73FB2A102J	CHIP R 1.0K J 1/10W		
VR901		✻	R39-0016-08	VIRIABLE RESIST 5k (AUX VOL.)		
VR981		✻	R39-0017-08	VARIABLE RESIST 1k (HP VOL.)		
SW501		✻	S68-0091-08	SWITCH RESET		
SW901		✻	T99-0607-08	SWITCH JOG		
SW950		✻	S70-0057-08	SWITCH POWER		
SW951		✻	S70-0057-08	SWITCH PLAY		
SW952		✻	S70-0057-08	SWITCH STOP		
SW953		✻	S70-0057-08	SWITCH REC		
SW954		✻	S70-0057-08	SWITCH CUE		
SW955		✻	S70-0057-08	SWITCH EJECT		
SW956		✻	S70-0057-08	SWITCH ENTER		
SW957		✻	S70-0057-08	SWITCH NAME		
SW958		✻	S70-0057-08	SWITCH TIMER		
SW959		✻	S70-0057-08	SWITCH DISP		
SW960		✻	S70-0057-08	SWITCH REVIEW		
SW961		✻	S70-0057-08	SWITCH TIME		
D301			MTZJ5.1(B)	DIODE		
D501			MTZJ6.8(B)	DIODE		
D502			MTZJ330A	DIODE		
D503,504			MTZJ9R1B	DIODE		
D505			MTZJ6.8	DIODE		
D506			MTZJ7.5(B)	DIODE		
D507			MTZJ5.6	DIODE		
D508		✻	MTZJ270D	DIODE		
D509,510			1SS133	DIODE		
D512,513			1SS133	DIODE		
D551-555			RL104A	DIODE		
D651			MTZJ9R1B	DIODE		
FL901		✻	B30-2527-08	INDICATOR TUBE		
IC101			NJM4565D	IC(OP AMP X2))		
IC201		✻	UDA1340	IC		
IC301		✻	74HCU04	IC		
IC302		✻	74HC10AP	IC		
IC501		✻	S81233YX	IC		
IC601			NJM4580D	IC(OP AMP X2))		
IC651			NJM4560D	IC(OP AMP X2))		

L : Scandinavia **K :** USA **P :** Canada **R :** Mexico
Y : PX(Far East, Hawaii) **T :** Europe **E :** Europe **G :** Germany
Y : AAFES(Europe) **X :** Australia **M :** Other Areas

⚠ indicates safety critical components.

✻ New Parts
Parts without **Parts No.** are not supplied.
Les articles non mentionnes dans le **Parts No.** ne sont pas fournis.
Teile ohne **Parts No.** werden nicht geliefert.

❺

Ref. No	Address	New Parts	Parts No.	Description			Destination	Remarks
IC901			IX0196AWZZ	IC				
IC902			PST9127NR	IC(SYSTEM RESET)				
Q451,452			2SC2878	TRANSISTOR				
Q501			KTA1266(Y)	TRANSISTOR				
Q502			2SB562	TRANSISTOR				
Q503			2SD468	TRANSISTOR				
Q504			2SD2012	TRANSISTOR				
Q505			KRC102M	TRANSISTOR				
Q506			2SD2012	TRANSISTOR				
Q601,602			2SC2878	TRANSISTOR				
Q653			KRC102M	TRANSISTOR				
Q901,902			2SC2412	TRANSISTOR				
RX302		✻	W02-2643-08	OPTICAL DIGITAL OUTPUT				
TX302		✻	W02-2643-08	OPTICAL DIGITAL INPUT				
UN970		✻	W02-2642-08	REMOCON SENSOR 21043TH2				
MD MECHANISM UNIT								
C1101		✻	C93-0033-08	CERAMIC	1UF	K		
C1102		✻	C93-0033-08	CERAMIC	1UF	K		
C1103			CK73FF1C105Z	CHIP C	1.0UF	Z		
C1104			CK73FB1H273K	CHIP C	0.027UF	K		
C1105		✻	C93-0033-08	CERAMIC	1UF	K		
C1106			CK73FB1C474K	CHIP C	0.47UF	K		
C1107			CK73FB1H472K	CHIP C	4700PF	K		
C1109		✻	C93-0033-08	CERAMIC	1UF	K		
C1110			CK73FB1C474K	CHIP C	0.47UF	K		
C1112-16		✻	C93-0034-08	CERAMIC	270PF	J		
C1117			CK73GB1H332K	CHIP C	3300PF	K		
C1118			CK73FB1H333K	CHIP C	0.033UF	K		
C1121			CK73FF1C105Z	CHIP C	1.0UF	Z		
C1145			CK73GB1C333K	CHIP C	0.033UF	K		
C1202,03			CK73FF1C105Z	CHIP C	1.0UF	Z		
C1204,05			CC73GCH1H120J	CHIP C	12PF	J		
C1206,07			CK73FF1C105Z	CHIP C	1.0UF	Z		
C1208			CK73GB1C473K	CHIP C	0.047UF	K		
C1209-11			CK73FF1C105Z	CHIP C	1.0UF	Z		
C1251			CK73GB1C273K	CHIP C	0.027UF	K		
C1252			CC73FCH1H121J	CHIP C	120PF	J		
C1254		✻	C92-0172-08	CHIP-C	10UF	K		
C1255		✻	C92-0171-08	CHIP-C	4.7UF	K		
C1401,02			CK73GB1C473K	CHIP C	0.047UF	K		
C1403			CK73GB1H681K	CHIP C	680PF	K		
C1405			CK73GF1E104Z	CHIP C	0.10UF	Z		
C1406			CK73FF1C105Z	CHIP C	1.0UF	Z		
C1407			CK73GB1C223K	CHIP C	0.022UF	K		
C1412			CK73GB1H681K	CHIP C	680PF	K		
C1421-24			CK73GB1C223K	CHIP C	0.022UF	K		
C1425			CK73GB1C473K	CHIP C	0.047UF	K		
C1601,02		✻	CK73FF1C105Z	CHIP C	1.0UF	Z		
C1604			CC73GCH1H560J	CHIP C	56PF	J		
C1605		✻	C92-0151-08	ELECTRO	100UF	10WV		
C1609			CK73EF1C105Z	CHIP C	1.0UF	Z		
C1610		✻	C92-0172-08	CHIP-C	10UF	K		
C1631			CK73FF1C105Z	CHIP C	1.0UF	Z		
C1650-53			CC73GSL1H821J	CHIP C	820PF	J		
C1654,55			CK73GB1E153K	CHIP C	0.015UF	K		

L : Scandinavia **K :** USA **P :** Canada **R :** Mexico
Y : PX(Far East, Hawaii) **T :** Europe **E :** Europe **G :** Germany
Y : AAFES(Europe) **X :** Australia **M :** Other Areas

⚠ indicates safety critical components.

✻ New Parts
Parts without **Parts No.** are not supplied.
Les articles non mentionnes dans le **Parts No.** ne sont pas fournis.
Teile ohne **Parts No.** werden nicht geliefert.

❻

Ref. No	Address	New Parts	Parts No.	Description			Destination	Remarks
C1656,57			CK73GB1H562K	CHIP C	5600PF	K		
C1661			C92-0151-08	ELECTRO	100UF	10WV		
C1724			CC73GCH1H220J	CHIP C	22PF	J		
C1801			CK73EF1C225Z	CHIP C	2.2UF	Z		
C1802			C92-0151-08	ELECTRO	100UF	10WV		
C1803		✻	CK73EF1C225Z	CHIP C	2.2UF	Z		
C1805			CK73FF1C105Z	CHIP C	1.0UF	Z		
C1806		✻	C92-0172-08	CHIP-C	10UF	K		
C1807		✻	C92-0174-08	ELECTRO	220UF	4WV		
C1913			CC73GCH1H220J	CHIP C	22PF	J		
C1917			CC73GCH1H680J	CHIP C	68PF	J		
C1927			CK73GB1C473K	CHIP C	0.047UF	K		
C1951			CK73GB1C473K	CHIP C	0.047UF	K		
C1952		✻	C93-0035-08	CERAMIC	0.01UF	K		
C1953			CK73FB1C474K	CHIP C	0.47UF	K		
C1954			CC73GCH1H150J	CHIP C	15PF	J		
C1955			CK73GB1C473K	CHIP C	0.047UF	K		
C1956		✻	C92-0175-08	ELECTRO	47UF	6.3WV		
C1957		✻	C92-0176-08	ELECTRO	100UF	6.3WV		
C1958			CK73GB1C473K	CHIP C	0.047UF	K		
C1964			CK73GB1H102K	CHIP C	1000PF	K		
C1990		✻	C93-0033-08	CERAMIC	1UF	K		
C1991		✻	C92-0172-08	CHIP-C	10UF	K		
JC121			CK73GB1C473K	CHIP C	0.047UF	K		
JC170,71			CC73FCH1H220J	CHIP C	22PF	J		
JC196			CC73FCH1H220J	CHIP C	22PF	J		
CN1101		✻	E40-8210-08	FLAT CABLE CONNECTOR		28P		
CN1252			E40-8080-08	PIN ASSY	2P			
CN1601		✻	E40-8211-08	FLAT CABLE CONNECTOR		5P		
CN1602		✻	E40-8212-08	PIN ASSY	2P			
CN1603		✻	E40-8078-08	PIN ASSY	2P			
CN1604		✻	E40-8213-08	PIN ASSY	2P			
CN1901		✻	E40-8209-08	FLAT CABLE CONNECTOR				
CN1902		✻	E40-8214-08	FLAT CABLE CONNECTOR		24P		
CN1904			E40-8084-08	PIN ASSY	4P			
CW1901		✻	E35-2070-08	FLAT CABLE				
CW1903	2D	✻	E35-2069-08	WIRING HARNESS				
L1101		✻	L90-0099-08	COIL	10UH			
L1102		✻	L90-0100-08	COIL	0.47UH			
L1201		✻	L90-0100-08	COIL	0.47UH			
L1203		✻	L90-0301-08	COIL	4.7UH			
L1251		✻	L90-0302-08	COIL	470UH			
L1601		✻	L90-0303-08	COIL	1UH			
L1950		✻	L90-0303-08	COIL	1UH			
XL1201		✻	L77-2224-08	CRYSTAL	33.8688MHZ			
C1111			R92-1824-08	JUMPER R	0	J 1/10W		
J1405			RK73GB1J103J	CHIP R	10K	J 1/16W		
LR190			RK73FB2A220J	CHIP R	22	J 1/10W		
R1100			RK73EB2B270J	CHIP R	27	J 1/8W		
R1102			RK73GB1J561J	CHIP R	560	J 1/16W		
R1105			RK73GB1J394J	CHIP R	390K	J 1/16W		
R1106			RK73GB1J103J	CHIP R	10K	J 1/16W		
R1107			RK73GB1J1R0J	CHIP R	1	J 1/16W		

L : Scandinavia **K :** USA **P :** Canada **R :** Mexico
Y : PX(Far East, Hawaii) **T :** Europe **E :** Europe **G :** Germany
Y : AAFES(Europe) **X :** Australia **M :** Other Areas

⚠ indicates safety critical components.

✻ New Parts
Parts without **Parts No.** are not supplied.
Les articles non mentionnes dans le **Parts No.** ne sont pas fournis.
Teile ohne **Parts No.** werden nicht geliefert.

❼

Ref. No	Address	New Parts	Parts No.	Description				Destination	Remarks
R1150-54			RK73GB1J223J	CHIP R	22K	J	1/16W		
R1155			RK73GB1J563J	CHIP R	56K	J	1/16W		
R1166			RK73GB1J122J	CHIP R	1.2K	J	1/16W		
R1201			RK73GB1J151J	CHIP R	150	J	1/16W		
R1202			RK73GB1J105J	CHIP R	1.0M	J	1/16W		
R1210			RK73GB1J101J	CHIP R	100	J	1/16W		
R1211			RK73GB1J221J	CHIP R	220	J	1/16W		
R1221			RK73GB1J221J	CHIP R	220	J	1/16W		
R1223			RK73FB2A681J	CHIP R	680	J	1/10W		
R1251			RK73GB1J100J	CHIP R	10	J	1/16W		
R1252,53			R92-1824-08	JUMPER R	0	J	1/10W		
R1254			RK73FB2A221J	CHIP R	220	J	1/10W		
R1255			R92-1823-08	JUMPER R	0	J	1/16W		
R1261-63			RK73GB1J103J	CHIP R	10K	J	1/16W		
R1266			RK73GB1J103J	CHIP R	10K	J	1/16W		
R1269		✻	R92-1823-08	JUMPER R	0	J	1/16W		
R1281			RK73GB1J470J	CHIP R	47	J	1/16W		
R1401			RK73GB1J102J	CHIP R	1.0K	J	1/16W		
R1404			RK73GB1J102J	CHIP R	1.0K	J	1/16W		
R1406,07			RK73GB1J332J	CHIP R	3.3K	J	1/16W		
R1408			RK73GB1J104J	CHIP R	100K	J	1/16W		
R1409			RK73GB1J102J	CHIP R	1.0K	J	1/16W		
R1412			RK73GB1J104J	CHIP R	100K	J	1/16W		
R1413			RK73GB1J332J	CHIP R	3.3K	J	1/16W		
R1414			RK73GB1J103J	CHIP R	10K	J	1/16W		
R1415			RK73GB1J102J	CHIP R	1.0K	J	1/16W		
R1416			RK73GB1J103J	CHIP R	10K	J	1/16W		
R1418			RK73GB1J473J	CHIP R	47K	J	1/16W		
R1420			RK73GB1J102J	CHIP R	1.0K	J	1/16W		
R1422-24			RK73GB1J103J	CHIP R	10K	J	1/16W		
R1425			RK73GB1J272J	CHIP R	2.7K	J	1/16W		
R1426			RK73GB1J102J	CHIP R	1.0K	J	1/16W		
R1427			RK73GB1J472J	CHIP R	4.7K	J	1/16W		
R1428			RK73GB1J102J	CHIP R	1.0K	J	1/16W		
R1429,30			RK73GB1J103J	CHIP R	10K	J	1/16W		
R1452			RK73GB1J332J	CHIP R	3.3K	J	1/16W		
R1454			RK73GB1J102J	CHIP R	1.0K	J	1/16W		
R1456			RK73GB1J102J	CHIP R	1.0K	J	1/16W		
R1458			RK73GB1J682J	CHIP R	6.8K	J	1/16W		
R1459			RK73GB1J103J	CHIP R	10K	J	1/16W		
R1460			RK73GB1J682J	CHIP R	6.8K	J	1/16W		
R1462			RK73GB1J682J	CHIP R	6.8K	J	1/16W		
R1463			RK73GB1J103J	CHIP R	10K	J	1/16W		
R1464			RK73GB1J221J	CHIP R	220	J	1/16W		
R1466			RK73GB1J221J	CHIP R	220	J	1/16W		
R1471			RK73GB1J103J	CHIP R	10K	J	1/16W		
R1472			RK73GB1J473J	CHIP R	47K	J	1/16W		
R1473			RK73GB1J104J	CHIP R	100K	J	1/16W		
R1474-76			RK73GB1J102J	CHIP R	1.0K	J	1/16W		
R1477			RK73GB1J103J	CHIP R	10K	J	1/16W		
R1609			RK73GB1J152J	CHIP R	1.5K	J	1/16W		
R1610		✻	R92-1869-08	METAL	30K	D	1/16W		
R1611		✻	R92-1870-08	METAL	12K	D	1/16W		
R1612			RK73GB1J563J	CHIP R	56K	J	1/16W		
R1613			RK73GB1J273J	CHIP R	27K	J	1/16W		

L : Scandinavia **K :** USA **P :** Canada **R :** Mexico
Y : PX(Far East, Hawaii) **T :** Europe **E :** Europe **G :** Germany
Y : AAFES(Europe) **X :** Australia **M :** Other Areas

⚠ indicates safety critical components.

✻ New Parts
Parts without **Parts No.** are not supplied.
Les articles non mentionnes dans le **Parts No.** ne sont pas fournis.
Teile ohne **Parts No.** werden nicht geliefert.

❽

Ref. No	Address	New Parts	Parts No.	Description				Destination	Remarks
R1614			R92-1871-08	METAL	18K	D	1/16W		
R1617			RK73GB1J473J	CHIP R	47K	J	1/16W		
R1620			R92-1823-08	JUMPER R	0	J	1/16W		
R1650			RK73GB1J103J	CHIP R	10K	J	1/16W		
R1651			RK73GB1J104J	CHIP R	100K	J	1/16W		
R1652			RK73GB1J103J	CHIP R	10K	J	1/16W		
R1653			RK73GB1J104J	CHIP R	100K	J	1/16W		
R1654			RK73GB1J682J	CHIP R	6.8K	J	1/16W		
R1655			RK73GB1J124J	CHIP R	120K	J	1/16W		
R1656			RK73GB1J682J	CHIP R	6.8K	J	1/16W		
R1657			RK73GB1J124J	CHIP R	120K	J	1/16W		
R1658			RK73GB1J153J	CHIP R	15K	J	1/16W		
R1659			RK73GB1J823J	CHIP R	82K	J	1/16W		
R1660			RK73GB1J153J	CHIP R	15K	J	1/16W		
R1661			RK73GB1J823J	CHIP R	82K	J	1/16W		
R1662			RK73GB1J103J	CHIP R	10K	J	1/16W		
R1663			RK73GB1J623J	CHIP R	62K	J	1/16W		
R1664			RK73GB1J103J	CHIP R	10K	J	1/16W		
R1665			RK73GB1J623J	CHIP R	62K	J	1/16W		
R1666,67			RK73GB1J223J	CHIP R	22K	J	1/16W		
R1668,69			RK73GB1J682J	CHIP R	6.8K	J	1/16W		
R1708			RK73GB1J682J	CHIP R	6.8K	J	1/16W		
R1733			RK73GB1J102J	CHIP R	1.0K	J	1/16W		
R1758,59			RK73GB1J102J	CHIP R	1.0K	J	1/16W		
R1801			RK73GB1J182J	CHIP R	1.8K	J	1/16W		
R1802			RK73GB1J271J	CHIP R	270	J	1/16W		
R1804		✻	R92-1873-08	METAL	220K	D	1/16W		
R1805		✻	R92-1874-08	METAL	100K	D	1/16W		
R1808			RK73GB1J273J	CHIP R	27K	J	1/16W		
R1809			RK73GB1J391J	CHIP R	390	J	1/16W		
R1820,21			RK73FB2A1R0J	CHIP R	1	J	1/10W		
R1827			RK73GB1J271J	CHIP R	270	J	1/16W		
R1901			RK73FB2A471J	CHIP R	470	J	1/10W		
R1902			RK73FB2A182J	CHIP R	1.8K	J	1/10W		
R1903,04			RK73FB2A821J	CHIP R	820	J	1/10W		
R1927			RK73FB2A220J	CHIP R	22	J	1/10W		
R1939			RK73GB1J102J	CHIP R	1.0K	J	1/16W		
R1940			RK73FB1J221J	CHIP R	220	J	1/16W		
R1947			RK73FB2A470J	CHIP R	47	J	1/10W		
R1952,53			RK73GB1J470J	CHIP R	47	J	1/16W		
R1961			RK73GB1J101J	CHIP R	100	J	1/16W		
R1962			RK73GB1J224J	CHIP R	220K	J	1/16W		
R1963			RK73GB1J152J	CHIP R	1.5K	J	1/16W		
R1964			RK73GB1J682J	CHIP R	6.8K	J	1/16W		
R1965			RK73GB1J103J	CHIP R	10K	J	1/16W		
R1967			RK73GB1J470J	CHIP R	47	J	1/16W		
R1968			RK73GB1J221J	CHIP R	220	J	1/16W		
R1969			RK73EB2B560J	CHIP R	56	J	1/8W		
R1973			RK73GB1J682J	CHIP R	6.8K	J	1/16W		
R1974			RK73GB1J221J	CHIP R	220	J	1/16W		
R1994			RK73GB1J470J	CHIP R	47	J	1/16W		
SW1952	2D	✻	S68-0090-08	PUSH SWITCH					
SW1953	2D		S64-0023-05	LEVER SWITCH					
SW1954,55	2D	✻	S64-0035-08	LEVER SWITCH					

L : Scandinavia **K :** USA **P :** Canada **R :** Mexico
Y : PX(Far East, Hawaii) **T :** Europe **E :** Europe **G :** Germany
Y : AAFES(Europe) **X :** Australia **M :** Other Areas

⚠ indicates safety critical components.

✻ New Parts
Parts without **Parts No.** are not supplied.
Les articles non mentionnes dans le **Parts No.** ne sont pas fournis.
Teile ohne **Parts No.** werden nicht geliefert.

❾

Ref. No	Address	New Parts	Parts No.	Description	Destination	Remarks
SW1956	2D	✻	S64-0036-08	LEVER SWITCH		
D1251,52			SB0209CP	DIODE		
D1990			1SS372	DIODE		
IC1101		✻	IR3R55	IC		
IC1201		✻	LR37648	IC		
IC1202			IX2474AF	IC		
IC1251			74ACT02F	IC		
IC1401		✻	IX0227AW	IC		
IC1402			S29294A	IC		
IC1601		✻	M56578FP	IC		
IC1801		✻	XC62EP32	IC		
IC1906		✻	TC7ST08F	IC		
IC1907			TC9246F	IC(CLOCK GENERATION)		
IC1916		✻	74VHC08FT	IC		
IC1990			74AC04FS	IC		
Q1251,52			2SK2909	FET		
Q1253,54		✻	2SK1473	FET		
Q1401		✻	RN2404	TRANSISTOR		
Q1402		✻	RNC1404	TRANSISTOR		
Q1403		✻	RN2404	TRANSISTOR		
Q1404		✻	RNC1404	TRANSISTOR		
Q1451		✻	RNC1407	TRANSISTOR		
Q1601			2SA1314C	TRANSISTOR		
Q1801			2SA1314C	TRANSISTOR		
Q1802,03		✻	RN1406	TRANSISTOR		
Q1807			2SA1314C	TRANSISTOR		
Q1820		✻	2SA1162G	TRANSISTOR		
Q1821,22		✻	RNC1407	TRANSISTOR		
MD MECHANISM ASSY						
201	2B	✻	J90-0857-08	GUIDE		
202	3A	✻	J90-0858-08	GUIDE		
203	2B	✻	A13-3122-08	FRAME		
204		✻	A10-3416-08	CHASSIS ASSY		
205	1A	✻	J19-5899-08	HOLDER		
206	2A	✻	D10-3789-08	SLIDER ASSY		
207	3B	✻	D10-3790-08	ARM		
208	1A	✻	D10-3791-08	ARM		
209	2A	✻	D10-3792-08	ARM ASSY		
210	1A	✻	D10-3793-08	SLIDER		
211	1A	✻	D10-3794-08	ARM		
212	1A	✻	D10-3795-08	SLIDER		
213	1A	✻	G01-4046-08	TORSION COIL SPRING		
214	3A	✻	G01-4047-08	TORSION COIL SPRING		
215	2A		G01-3972-08	EXTENSION SPRING		
216	1A		G01-3974-08	EXTENSION SPRING		
217	2A		G01-3971-08	EXTENSION SPRING		
218	1A		G01-3976-08	TORSION COIL SPRING		
219	2A	✻	G02-1651-08	FLAT SPRING		
220	2B	✻	G02-1652-08	FLAT SPRING		
221	2A		G01-3973-08	EXTENSION SPRING		
222	2A	✻	D13-1859-08	GEAR		
223	2A	✻	D13-1860-08	GEAR		
224	3A	✻	D13-1861-08	GEAR		
225	2A	✻	D13-1862-08	GEAR		

L : Scandinavia **K :** USA **P :** Canada **R :** Mexico
Y : PX(Far East, Hawaii) **T :** Europe **E :** Europe **G :** Germany
Y : AAFES(Europe) **X :** Australia **M :** Other Areas

⚠ indicates safety critical components.

✻ New Parts
Parts without **Parts No.** are not supplied.
Les articles non mentionnes dans le **Parts No.** ne sont pas fournis.
Teile ohne **Parts No.** werden nicht geliefert.

❿

Ref. No	Address	New Parts	Parts No.	Description	Destination	Remarks
226	2A	✻	D13-1863-08	LACK GEAR		
229	1A	✻	D13-1864-08	GEAR		
230	1A	✻	D14-0394-08	ROLLER		
231	2A	✻	D19-0312-08	LEAD SCREW		
232	2A	✻	D21-1895-08	SHAFT		
233	2A		D10-3699-08	ROD		
234	3A		D10-3702-08	ROD		
235	1B	✻	A01-3562-08	CASE		
237	2B		J02-1183-08	INSULATOR		
238	2B		J02-1184-08	INSULATOR		
239	1B	✻	G11-2380-08	CUSHION		
242	2B	✻	E35-2067-08	FLAT CABLE		
243	2B	✻	E35-2068-08	WIRING HARNESS		
245	1A	✻	F19-1083-08	SHEET		
246	3B	✻	D10-3796-08	ARM(A)		
247	3B	✻	D10-3797-08	ARM(B)		
250		✻	F19-1084-08	SHEET		
249	3B	✻	G09-0666-08	SPRING (ARM)		
248		✻	J90-0859-08	MOUNTING HARDWARE		
B		✻	N09-3426-08	SCREW M1.7X7.5		
D			N09-3115-08	SCREW M1.4X2.2		
F			N09-3347-08	SCREW M1.7X2.5		
G			N09-3352-08	SCREW M1.7X8.9		
K			N09-3350-08	SCREW M2.0X4.0		
L			N09-3351-08	SCREW M1.7X3.0		
M			N09-3428-08	SCREW		
DM	3A	✻	T42-0904-08	MOTOR ASSY M901		
FM	3A	✻	T42-0905-08	MOTOR ASSY M902		
LM	3A	✻	T42-0906-08	MOTOR ASSY M903		
PU	2A	✻	T25-0073-08	OPTICA PICKUP		
RH	1A	✻	T30-0017-08	RECORDING HEAD		

L : Scandinavia **K :** USA **P :** Canada **R :** Mexico
Y : PX(Far East, Hawaii) **T :** Europe **E :** Europe **G :** Germany
Y : AAFES(Europe) **X :** Australia **M :** Other Areas

⚠ indicates safety critical components.

DM-3090

SPECIFICATIONS

[Format]

System ..... Minidisc digital audio system
Laser ..... Semiconductor laser
Recording method ..... Field modulation overwrite method
Audio compression ..... ATRAC (Adaptive TRansform Acoustic Coding)
Playing rotation ..... Approx. 400 rpm ~ 900 rpm (CLV)

[D/A, A/D converter]

D/A converter ..... 1 Bit
Sampling frequency ..... 44.1 kHz

[Digital audio performance]

Frequency responce (playback mode) ..... 8 Hz ~ 20 kHz, ± 1 dB
Signal to noise ratio (playback mode) ..... More than 100 dB
Wow & flutter ..... Less than unmeasurable limit
Analog input sensitivity / input impedance ..... 0.5V / 22 kΩ or more
Analog output level/output impedance ..... 2.0 V / Less than 2 kΩ
Headphone output ..... 15 mW/32 Ω load
Digital input
Coxaial ..... 0.5 Vp-p / 75 Ω
Optical(Wave length 660 nm) ..... - 15 dBm ~ - 21 dBm
Digital output
Optical(Wave length 660 nm) ..... - 15 dBm ~ - 21 dBm

[General]

Power consumption ..... 17 W
Dimensions ..... W : 440 mm (17 - 5 / 16")
..... H : 94 mm (3 - 11 / 16")
..... D : 300 mm (11 - 13 / 16")
Weight (Net) ..... 3.55 kg (7.9 lb)

Notes

1. KENWOOD follows a policy of continuous advancements in development. For this reason specifications may be changed without notice.
2. The full performance may not be exhibited in an extremely cold location (under a water-freezing temperature).

Note:
Component and circuit are subject to modification to insure best operation under differing local conditions. This manual is based on Europe (E) standard, and provides information on regional circuit modification through use of alternate schematic diagrams, and information on regional component variations through use of parts list.

KENWOOD CORPORATION
14-6,Dogenzaka 1-chome, Shibuya-ku, Tokyo, 150 Japan

KENWOOD SERVICE CORPORATION
P.O BOX 22745, 2201 East Dominguez St., Long Beach, CA 90801-5745, U.S.A.

KENWOOD ELECTRONICS CANADA INC.
6070 Kestrel Road, Mississauga, Ontario, Canada L5T 1S8

KENWOOD ELECTRONICS LATIN AMERICA S.A.
P.O BOX 55-2791, Piso 6 plaza Chase, Cl. 47 y Aquilino de la Guardia Panama, Republic de Panama

KENWOOD ELECTRONICS U.K. LIMITED
KENWOOD House, Dwight Road, Watford, Herts., WD1 8EB., United Kingdom

KENWOOD ELECTRONICS BENELUX N.V.
Meachelsesteenweg 418, B-1930 Zaventem, Belgium

KENWOOD ELECTRONICS DEUTSCHLAND GMBH
Rembrücker Str. 15, 63150 Heusenstamm, Germany

KENWOOD ELECTRONICS FRANCE S.A.
13 Boulevard Ney, 75018 Paris, France

KENWOOD ELECTRONICS ITALIA S.p.A.
Via G. Sirtori, 7/9 20129, Milano, Italy

KENWOOD IBÉRICA S.A.
Bolivia, 239-08020 Barcelona, Spain

KENWOOD ELECTRONICS AUSTRALIA PTY. LTD.
(A.C.N. 001499 074)
P.O Box 504, 8 Figtree Drive, Australia Centre, Homebush, N.S.W. 2140, Australia

KENWOOD & LEE ELECTRONICS, LTD.
Unit 3712-3724, Level 37, Tower 1, Metroplaza, 223 Hing Fong Road, Kwai Fong N.T., Hong Kong

KENWOOD ELECTRONICS GULF FZE
P.O.Box 61318, Jebel Ali, Dubai, U.A.E.

KENWOOD ELECTRONICS SINGAPORE PTE LTD.
No. 1 Genting Lane #02-02, KENWOOD Building, Singapore, 349544

KENWOOD ELECTRONICS (MALAYSIA) SDN BHD.
#4.01 Level 4, Wisma Academy Lot 4A, Jalan 19/1 46300 Petaling Jaya Selangor Darul Ehsan Malaysia